.mdd

Storages

v1 / 01.01.2023

Basic - pedestals 3
Basic - storages 9
Standard - pedestals 16
Mobile pedestal without handles 19
Mobile pedestals 20
Mobile pedestals with separate pencil drawer 22
Copmplementary elements 23
Standard - Cargo pedestals 24
Standard - locker type storage 27
Standard - managerial storages 33
Standard - managerial storage 36
Standard - mobile storage - multifunction 39
Standard - storages and filing cabinets with metal shelves 41
Standard - wardrobes 47
Standard - sliding door storages 50
Standard - tambour storages 54
Standard - storages 57
Standard - glass door storages 64
Viga - pedestals 68
Viga - managerial storages 70
Viga - storages 72
Stilt - bookcases 75
Color - pedestals 79
Color - storages 82
Hangers 85

Pedestals

	BASIC	STANDARD	COLOR
drawer	MFC	metal	metal
body	black, white, aluminum or anthracite	available in all colours (group I & II)	black, white, aluminum or anthracite
top and front	MFC in all colours	MFC in all colours	in all HPL - mat colours
pencil tray	plastic pencil tray	plastic pencil tray or separate pencil drawer	pencil tray
ball runners	not available	optional	optional
soft closing	not available	optional	optional
handle STANDARD			no handles
handle PRO (optional)			

Cabinets

	BASIC	STANDARD	COLOR
back	3 mm HDF	18 mm MFC	18 mm MFC
body	black, white, aluminum or anthracite	available in all colours (group I & II)	black, white, aluminum or anthracite
metal base	not available	optional	optional
wide angle hinges	not available	optional	not available
glass top for storages 801 mm wide	not available	not available	optional
handle STANDARD			push-to-open
front PRO (optional)		+ espagnolette lock	

Colour combination - Basic - pedestals

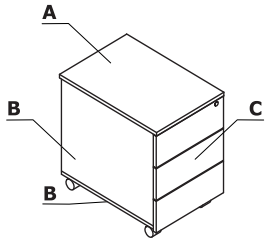

Material	Colour	Pedestal													
		A - Top	B - Body, base	C - Front	Whole - KKT11, KKT110										
MFC	08 - black	✓	✓	✓	✓										
	26 - aluminum satinato	✓	✓	✓	✓										
	31 - canadian oak	✓		✓											
	39 - polar birch	✓		✓											
	64 - cocoa	✓		✓											
	67 - white pastel	✓	✓	✓	✓										
	106 - lowland walnut	✓		✓											
	154 - anthracite	✓	✓	✓	✓										
	167 - grey oak	✓		✓											
	168 - natural oak	✓		✓											
	169 - honey oak	✓		✓											
	170 - acacia	✓		✓											
	171 - dark walnut	✓		✓											

Colour combination - Basic - pedestals

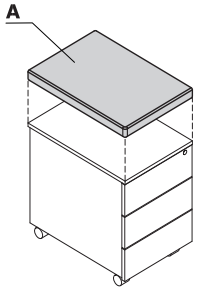

Material	Colour	Pedestal cushion													
		A - SKP13													
Fabric	Nemo	✓													
	Runner	II group ✓													
	Medley	II group ✓													
	**Atlantic	II group ✓													
	Vita	II group ✓													
	Mica	II group ✓													
	Go Check	II group ✓													
	****Charles	II group ✓													
	*Customer's own fabric	II group ✓													
	Synergy	III group ✓													
	***Silvertex	III group ✓													
	Tessa	III group ✓													
	Oceanic	III group ✓													
	Quest	III group ✓													
	Grain	III group ✓													
	Atlas	IV group ✓													

* Employing the customer's fabric requires running upholstery tests in order to check the possibility of realisation.

** There is a possibility of ordering the product in full colour spectrum of Atlantic range, as per Gabriel's pattern book, within 8 weeks

*** There is a possibility of ordering the product in full colour spectrum of Silvertex range, as per Spradling's pattern book, within 15 working days.

**** There is a possibility of ordering the product in full colour spectrum of Charles range, as per Dekoma pattern book, within the standard delivery time.

Mobile pedestal without handles

1 **Body** - MFC 18 mm, ABS edge
2 **Front** - MFC 18 mm, ABS edge
3 **MFC drawer** - roll runners, max load 25 kg, 80% extractio
4 **Sliding pencil tray** - MFC 18 mm
5 **Pencil tray** - plastic, colour: black
6 **Central lock** - foldable key
7 **Castors** - Ø50 mm, two with brakes
8 **Optional cushion SKP13** - for pedstal, max load 120 kg, ordered separetely

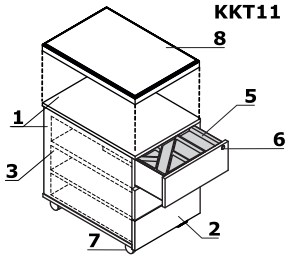

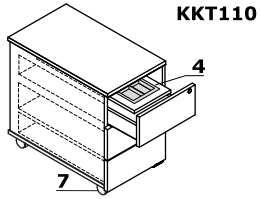

ATTENTION - Sitting on the pedestal KKT11 possible only after mounting the cushion (SKP13); the pedestal with cushion is intended for sitting only - moving the pedestal while sitting may result in damaging the castors

Mobile pedestals

1 **Top** - MFC 18 mm, ABS edge
2 **Body** - MFC 18 mm, ABS edge
3 **Front** - MFC 18 mm, ABS edge
4 **MFC drawer** - roll runners, max load 25 kg, 80% extractio
5 **Sliding pencil tray** - MFC 18 mm
6 **Pencil tray** - plastic, colour: black
7 **Suspension files drawer** - max load 30 kg, 80% extraction; A4 folders can be situated perpendicularly to the front
8 **Central lock** - foldable key
9 **Castors** - Ø50 mm, two with brakes

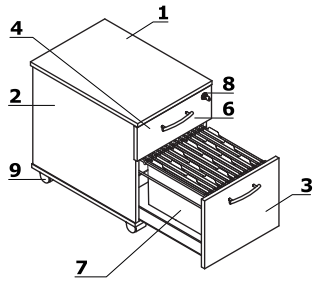

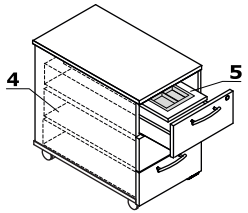

ATTENTION - sitting on the pedestal KKT12, KKT13 possible only after mounting the cushion (SKP13); the pedestal with cushion is intended for sitting only - moving the pedestal while sitting may result in damaging the castors

Stationary pedestals

1 **Top** - MFC 28 mm, ABS edge
2 **Body** - MFC 18 mm, ABS edge
3 **Front** - MFC 18 mm, ABS edge
4 **MFC drawer** - roll runners, max load 25 kg, 80% extractio
5 **Pencil tray** - plastic, colour: black
6 **Central lock** - foldable key
7 **Leveling** - 10 mm range

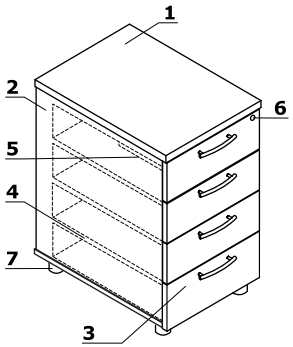

Pedestals with top overhang - dimensions (mm)

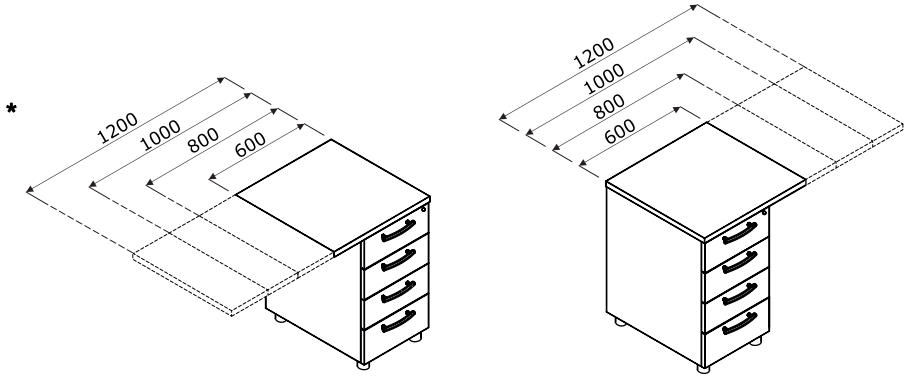

* Pedestal with top overhang

	Symbol	Price EUR	Dimensions			kg m3 pcs	Comments	Extra charge
			Width	Depth	Height			Handle PRO
Mobile pedestal without handles								
	KKT110	**204,-**	348	600	586	22 kg 0.158 m3 1 pcs	no handles, colours: white, aluminium, anthracite	
	KKT11	**224,-**	416	600	586	26 kg 0.158 m3 1 pcs		
Pedestals								
	KKT130	**204,-**	334	600	586	22 kg 0.158 m3 1 pcs	mobile; drawers depth – 500 mm	15,-
	KKT13	**224,-**	402	600	586	26 kg 0.158 m3 1 pcs		15,-
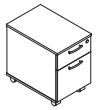	**KKT12**	**246,-**	402	600	586	32 kg 0.158 m3 1 pcs	mobile with susspension files drawer, drawers depth – 500 mm; A4 folders can be situated perpendicularly to the front	10,-
	KKT64	**256,-**	402	600	740	34 kg 0.225 m3 1 pcs	drawers depth – 500 mm	20,-
	KKT74	**266,-**	402	800	740	37 kg 0.312 m3 1 pcs		20,-

	Symbol	Price EUR	Dimensions			kg m3 pcs	Comments	Extra charge							
			Width	Depth	Height			Handle PRO							
Pedestals with top overhang 600 mm wide															
	KT664	**314,-**	600	600	740	36.9 kg 0.238 m3 4 pcs	Flat bar for fixing to the top included	20,-							
	KT674	**364,-**	600	800	740	41.6 kg 0.33 m3 4 pcs		20,-							
Pedestals with top overhang 800 mm wide															
	KT864	**318,-**	800	600	740	39.6 kg 0.243 m3 4 pcs	Flat bar for fixing to the top included	20,-							
	KT874	**368,-**	800	800	740	43.85 kg 0.336 m3 4 pcs		20,-							
Pedestals with top overhang 1000 mm wide															
	KT1064	**326,-**	1000	600	740	41.4 kg 0.247 m3 4 pcs	Flat bar for fixing to the top included	20,-							
	KT1074	**376,-**	1000	800	740	46.75 kg 0.341 m3 4 pcs		20,-							
Pedestals with top overhang 1200 mm wide															
	KT1264	**330,-**	1200	600	740	43.8 kg 0.251 m3 4 pcs	Flat bar for fixing to the top included	20,-							
	KT1274	**382,-**	1200	800	740	49.95 kg 0.347 m3 4 pcs		20,-							

Accessories

	Symbol	Price EUR	Dimensions			kg m3 pcs	Comments	Extra charge							
			Width	Depth	Height			II Price group	III Price group	IV price group					
	SKP13	**92,-**	400	600	52	3.7 kg 0.017 m3 1 pcs	pedestal cushions (except KKT110 i KKT130)	14,-	29,-	41,-					
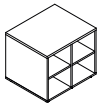	**S85**	**204,-**	710	600	600	36.4 kg 0.066 m3 1 pcs	under printer storage, colours: 26-aluminium satinato, 67-white pastel, 154-anthracite								
	ZT1000	**42,-**	15	15	0	0.5 kg 0.001 m3 1 pcs	plugs for holes ø 15mm 1000pcs								

Colour combination - Basic - storages

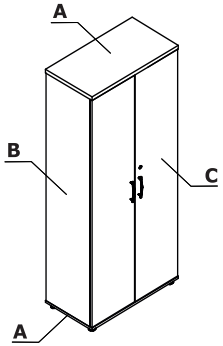

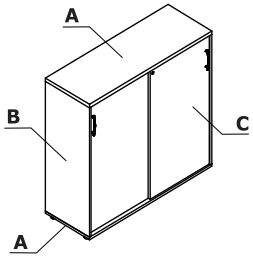

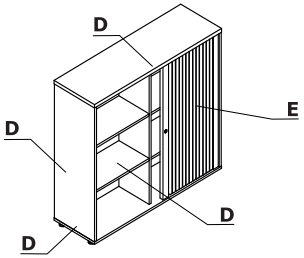

Material	Colour	Storages													
		A - Top, base	B - Body	C - Front	D - K3Z06	E - Tambour front									
MFC	08 - black	✓	✓	✓	✓	✓									
	26 - aluminum satinato	✓	✓	✓	✓	✓									
	31 - canadian oak	✓		✓											
	39 - polar birch	✓		✓											
	64 - cocoa	✓		✓											
	67 - white pastel	✓	✓	✓	✓	✓									
	106 - lowland walnut	✓		✓											
	154 - anthracite	✓	✓	✓	✓	✓									
	167 - grey oak	✓		✓											
	168 - natural oak	✓		✓											
	169 - honey oak	✓		✓											
	170 - acacia	✓		✓											
	171 - dark walnut	✓		✓											

Storages

1 **Top** - MFC 28 mm, ABS edge
2 **Body** - MFC 18 mm, ABS edge
3 **Back MFC** - 3 mm, no edging
4 **Front** - MFC 18 mm, ABS edge, plain hinge 110°
5 **Patent lock**
6 **Aluminum handle**
7 **Shelf** - MFC 18 mm, protection against accidental falling-out, ABS edge
8 **Leveling feet 27 mm** - range 5 mm
9 **Base** - MFC 18 mm, ABS edge
10 **OPTION WITH EXTRA CHARGE** - handle Pro - colour: white, black, aluminium

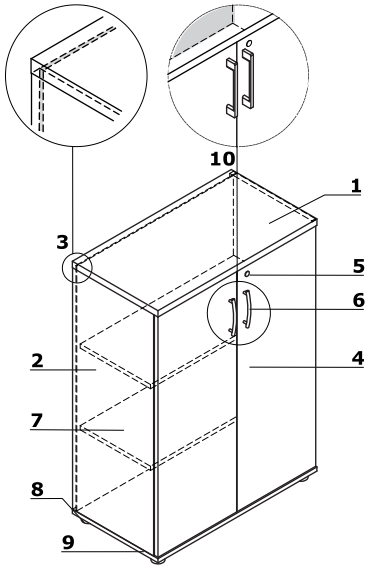

ATTENTION - Raw 3 mm HDF is visible on the back

Additional elements for storages

1 **KS300**
- glass door 3OH
- frosted tempered glass 4 mm, with aluminum frame

2 **KS310**
- glass door 3OH
- transparent tempered glass 4 mm

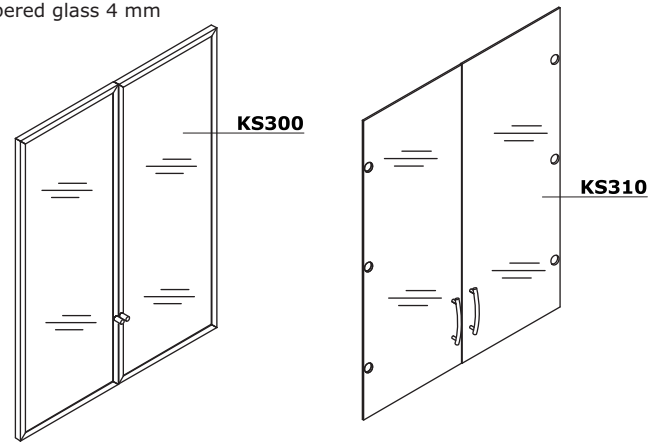

Storages

	Symbol	Price EUR	Dimensions			kg m3 pcs	Comments	Extra charge
			Width	Depth	Height			Handle PRO
	K26P2	**156,-**	402	385	777	32 kg 0.079 m3 3 pcs	option - left hand side or right hand side front; visible back panel, raw HDF 3mm, 2OH	5,-
	K36P2	**166,-**	402	385	1129	46 kg 0.107 m3 3 pcs	option - left hand side or right hand side front; visible back panel, raw HDF 3mm, 3OH	5,-
	K46P2	**179,-**	402	385	1481	56 kg 0.135 m3 3 pcs	option - left hand side or right hand side front; visible back panel, raw HDF 3mm, 4OH	5,-
	K56P2	**195,-**	402	385	1833	68 kg 0.162 m3 3 pcs	option - left hand side or right hand side front; visible back panel, raw HDF 3mm, 5OH	5,-
	K66P2	**208,-**	402	385	2185	82 kg 0.19 m3 3 pcs	option - left hand side or right hand side front; visible back panel, raw HDF 3mm, 6OH	5,-
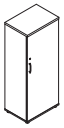	**K2603**	**170,-**	602	385	777	40 kg 0.117 m3 3 pcs	option - left hand side or right hand side front; visible back panel, raw HDF 3mm, 2OH	5,-
	K3603	**175,-**	602	385	1129	56 kg 0.144 m3 3 pcs	option - left hand side or right hand side front; visible back panel, raw HDF 3mm, 3OH	5,-
	K4603	**201,-**	602	385	1481	56 kg 0.196 m3 3 pcs	option - left hand side or right hand side front; visible back panel, raw HDF 3mm, 4OH	5,-
	K5603	**245,-**	602	385	1833	88 kg 0.225 m3 3 pcs	option - left hand side or right hand side front; visible back panel, raw HDF 3mm, 5OH	5,-
	K6603	**256,-**	602	385	2185	105 kg 0.272 m3 5 pcs	option - left hand side or right hand side front; visible back panel, raw HDF 3mm, 6OH	5,-
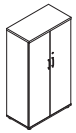	**K2104**	**184,-**	801	385	777	34.5 kg 0.075 m3 3 pcs	visible back panel, raw HDF 3mm, 2OH	10,-
	K21B4	**184,-**	801	385	740	32 kg 0.074 m3 3 pcs		10,-
	K3104	**224,-**	801	385	1129	45 kg 0.101 m3 3 pcs	visible back panel, raw HDF 3mm, 3OH	10,-
	K4104	**260,-**	801	385	1481	48 kg 0.124 m3 3 pcs	visible back panel, raw HDF 3mm, 4OH	10,-
	K5104	**296,-**	801	385	1833	68.55 kg 0.151 m3 3 pcs	visible back panel, raw HDF 3mm, 5OH	10,-
	K6104	**341,-**	801	385	2185	68 kg 0.173 m3 3 pcs	visible back panel, raw HDF 3mm, 6OH	10,-

	Symbol	Price EUR	Dimensions			kg m3 pcs	Comments	Extra charge
			Width	Depth	Height			Handle PRO
Storages								
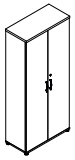	**K5204**	**304,-**	801	385	1833	57.4 kg 0.126 m3 3 pcs	wardrobe with slide out hanger, back - raw HDF 3 mm, without lock, 5OH	10,-
	K52P4	**376,-**	801	385	1833	68.4 kg 0.153 m3 3 pcs	wardrobe and filing storage with slide out hanger, back - raw HDF 3 mm, without lock, 5OH	10,-
	K5214	**336,-**	801	600	1833	72.65 kg 0.161 m3 3 pcs	wardrobe with coat rod, back - raw HDF 3 mm, without lock, 5OH	10,-
Bookcases								
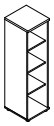	**K2902**	**122,-**	402	385	777	15 kg 0.035 m3 2 pcs	visible back panel, raw HDF 3mm, 2OH	
	K3902	**130,-**	402	385	1129	20 kg 0.047 m3 2 pcs	visible back panel, raw HDF 3mm, 3OH	
	K4902	**155,-**	402	385	1481	25 kg 0.071 m3 2 pcs	visible back panel, raw HDF 3mm, 4OH	
	K5902	**184,-**	402	385	1833	29 kg 0.066 m3 2 pcs	visible back panel, raw HDF 3mm, 5OH	
	K6902	**209,-**	402	385	2185	34 kg 0.08 m3 2 pcs	visible back panel, raw HDF 3mm, 6OH	
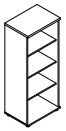	**K2503**	**133,-**	602	385	777	18 kg 0.049 m3 2 pcs	visible back panel, raw HDF 3mm, 2OH	
	K3503	**152,-**	402	385	1129	24 kg 0.065 m3 2 pcs	visible back panel, raw HDF 3mm, 3OH	
	K4503	**178,-**	602	385	1481	28 kg 0.081 m3 2 pcs	visible back panel, raw HDF 3mm, 4OH	
	K5503	**204,-**	602	385	1833	35.5 kg 0.096 m3 2 pcs	visible back panel, raw HDF 3mm, 5OH	
	K6503	**230,-**	602	385	2185	40.5 kg 0.086 m3 2 pcs	visible back panel, raw HDF 3mm, 6OH	

	Symbol	Price EUR	Dimensions			kg m3 pcs	Comments	Extra charge
			Width	Depth	Height			Handle PRO
Bookcases								
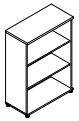	**K2504**	**144,-**	801	385	777	23.5 kg 0.055 m3 2 pcs	visible back panel, raw HDF 3mm, 2OH	
	K25B4	**144,-**	801	385	740	23 kg 0.055 m3 2 pcs	2OH	
	K3504	**174,-**	801	385	1129	31 kg 0.075 m3 2 pcs	visible back panel, raw HDF 3mm, 3OH	
	K4504	**199,-**	801	385	1481	34 kg 0.089 m3 2 pcs	visible back panel, raw HDF 3mm, 4OH	
	K5504	**224,-**	801	385	1833	46.15 kg 0.11 m3 2 pcs	visible back panel, raw HDF 3mm, 5OH	
	K6504	**249,-**	801	385	2185	47 kg 0.121 m3 2 pcs	visible back panel, raw HDF 3mm, 6OH	
Half bookcases								
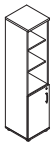	**K38P2**	**144,-**	402	385	1129	42 kg 0.111 m3 3 pcs	option - left hand side or right hand side front; visible back panel, raw HDF 3mm, 3OH	5,-
	K58P2	**196,-**	402	385	1833	60 kg 0.162 m3 3 pcs	option - left hand side or right hand side front; visible back panel, raw HDF 3mm, 5OH	5,-
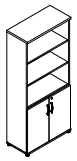	**K3404**	**212,-**	801	385	1129	42 kg 0.095 m3 3 pcs	visible back panel, raw HDF 3mm, 3OH	10,-
	K4304	**244,-**	801	385	1481	45 kg 0.116 m3 3 pcs	visible back panel, raw HDF 3mm, 4OH	10,-
	K4404	**234,-**	801	385	1481	42.5 kg 0.108 m3 3 pcs	visible back panel, raw HDF 3mm, 4OH	10,-
	K5304	**266,-**	801	385	1833	60.15 kg 0.136 m3 3 pcs	visible back panel, raw HDF 3mm, 5OH	10,-
	K5404	**256,-**	801	385	1833	57.15 kg 0.129 m3 3 pcs	visible back panel, raw HDF 3mm, 5OH	10,-

Stack-on storages 2OH	Symbol	Price EUR	Dimensions			kg m3 pcs	Comments	Extra charge
			Width	Depth	Height			Handle PRO
	K16P2	**140,-**	402	385	750	32 kg 0.079 m3 3 pcs	option - left hand side or right hand side front; visible back panel, raw HDF 3mm, 2OH	5,-
	K1902	**122,-**	402	385	750	15 kg 0.035 m3 2 pcs	visible back panel, raw HDF 3mm, 2OH	
	K16P3	**212,-**	602	385	750	40 kg 0.117 m3 3 pcs	option - left hand side or right hand side front; visible back panel, raw HDF 3mm, 2OH	5,-
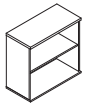	**K1504**	**144,-**	801	385	750	23.5 kg 0.055 m3 2 pcs	back - HDF 3mm	
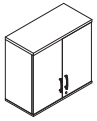	**K1104**	**184,-**	801	385	750	33.6 kg 0.075 m3 3 pcs		10,-
Tambour storage								
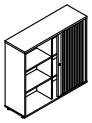	**K3Z06**	**630,-**	1200	385	1129	69 kg 0.6 m3 1 pcs	Top and bodyavailable in colours: 08 - black, 26 – aluminium satinato; 67 – white pastel, 154 - anthraciteTambour front available in colours: 09 – aluminium; 08 – black or 30 - white	

Additional elements for storages

	Symbol	Price EUR	Dimensions			kg m3 pcs	Comments	Extra charge
			Width	Depth	Height			Handle PRO
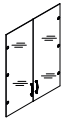	**KS310**	**144,-**	800	5	1050	13 kg 0.068 m3 2 pcs	glass doors (2pcs); 3OH, transparent tempered glass	10,-
	KS300	**296,-**	800	20	1050	10.301 kg 0.037 m3 1 pcs	glass doors (2pcs); 3OH with aluminium frame, frosted tempered glass	

Colour combination - Standard - pedestals

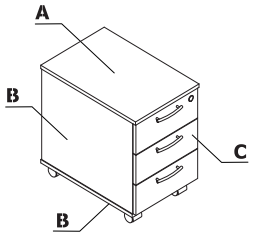

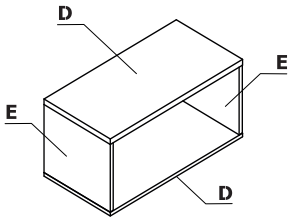

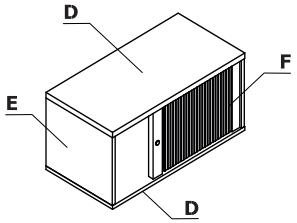

Material	Colour	Mobile pedestal without handles	Other pedestals			Copmplementary elements									
		Whole	A - Top	B - Body, base	C - Front	D - Top, base	E - Body	F - Tambour front	PA1L, SKP13						
MFC	08 - black	✓	✓	✓	✓	✓	✓	✓							
	26 - aluminum satinato	✓	✓	✓	✓	✓	✓	✓							
	31 - canadian oak		✓	II group ✓	✓	✓	II group ✓	✓							
	39 - polar birch		✓	II group ✓	✓	✓	II group ✓	✓							
	64 - cocoa		✓	II group ✓	✓	✓	II group ✓	✓							
	67 - white pastel	✓	✓	✓	✓	✓	✓	✓							
	106 - lowland walnut		✓	II group ✓	✓	✓	II group ✓	✓							
	154 - anthracite	✓	✓	✓	✓	✓	✓	✓							
	167 - grey oak		✓	II group ✓	✓	✓	II group ✓	✓							
	168 - natural oak		✓	II group ✓	✓	✓	II group ✓	✓							
	169 - honey oak		✓	II group ✓	✓	✓	II group ✓	✓							
	170 - acacia		✓	II group ✓	✓	✓	II group ✓	✓							
	171 - dark walnut		✓	II group ✓	✓	✓	II group ✓	✓							

Material	Colour	Mobile pedestal without handles	Other pedestals			Copmplementary elements									
		Whole	A - Top	B - Body, base	C - Front	D - Top, base	E - Body	F - Tambour front	PA1L, SKP13						
Fabric	Nemo								✓						
	Runner								II group ✓						
	Medley								II group ✓						
	**Atlantic								II group ✓						
	Vita								II group ✓						
	Mica								II group ✓						
	Go Check								II group ✓						
	****Charles								II group ✓						
	*Customer's own fabric								II group ✓						
	Synergy								III group ✓						
	***Silvertex								III group ✓						
	Tessa								III group ✓						
	Oceanic								III group ✓						
	Quest								III group ✓						
	Grain								III group ✓						
	Atlas								IV group ✓						

* Employing the customer's fabric requires running upholstery tests in order to check the possibility of realisation.

** There is a possibility of ordering the product in full colour spectrum of Atlantic range, as per Gabriel's pattern book, within 8 weeks

*** There is a possibility of ordering the product in full colour spectrum of Silvertex range, as per Spradling's pattern book, within 15 working days.

**** There is a possibility of ordering the product in full colour spectrum of Charles range, as per Dekoma pattern book, within the standard delivery time.

Mobile pedestal without handles

1 **Body** - MFC 18 mm, ABS edge
2 **Front** - MFC 18 mm, ABS edge
3 **Metal drawer** - roll runners, max load 25 kg, 80% extraction, anti-tilt mechanism; OPTION WITH EXTRA CHARGE - ball runners, soft-closing system
4 **Pencil tray** - plastic, colour: black
5 **Central lock** - foldable key
6 **Suspension files drawer** - ball runners, max load 30 kg, 100% extractionn, A4 folders can be situated parallelly and perpendicularly to the front
7 **Castors** - Ø50 mm, two with brakes
8 **Optional cushion SKP13** - for pedstal, max load 120 kg, ordered separetely

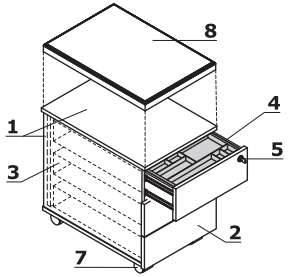

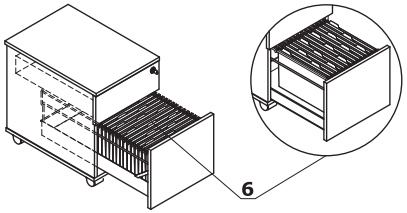

ATTENTION - sitting on the pedestal possible only after mounting the cushion (SKP13); the pedestal with cushion is intended for sitting only - moving the pedestal while sitting may result in damaging the castors

Mobile pedestals

1 **Top** - MFC 18 mm, ABS edge
2 **Body** - MFC 18 mm, ABS edge
3 **Front** - MFC 18 mm, ABS edge
4 **Metal drawer** - roll runners, max load 25 kg, 80% extraction, anti-tilt mechanism; OPTION WITH EXTRA CHARGE - ball runners, soft-closing system
5 **Pencil tray** - plastic, colour: black
6 **Central lock** - foldable key
7 **Aluminum handle:**
- * Standard
- ** OPTION WITH EXTRA CHARGE - handle Pro - colour: white, black, aluminium

8 **Suspension files drawer** - ball runners, max load 30 kg, 100% extractionn, A4 folders can be situated parallelly and perpendicularly to the front
9 **Castors** - Ø50 mm, two with brakes

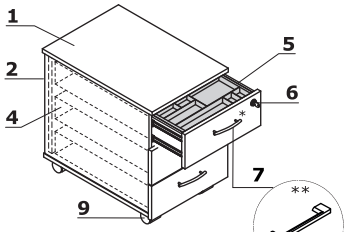

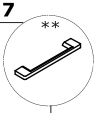

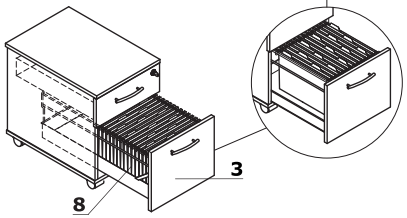

ATTENTION - sitting on the pedestal possible only after mounting the cushion (SKP13); the pedestal with cushion is intended for sitting only - moving the pedestal while sitting may result in damaging the castors

Stationary pedestals (mm)

1 **Top** - MFC 28 mm, ABS edge
2 **Body** - MFC 18 mm, ABS edge
3 **Front** - MFC 18 mm, ABS edge
4 **Metal drawer** - roll runners, max load 25 kg, 80% extraction, anti-tilt mechanism; OPTION WITH EXTRA CHARGE - ball runners, soft-closing system
5 **Pencil tray** - plastic, colour: black
6 **Central lock** - foldable key
7 **Aluminum handle:**
- * Standard
- ** OPTION WITH EXTRA CHARGE - handle Pro - colour: white, black, aluminium

8 **Suspension files drawer** - ball runners, max load 30 kg, 100% extractionn, A4 folders can be situated parallelly and perpendicularly to the front
9 **Leveling** - 10 mm range

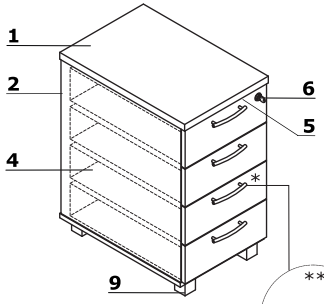

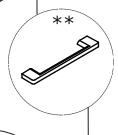

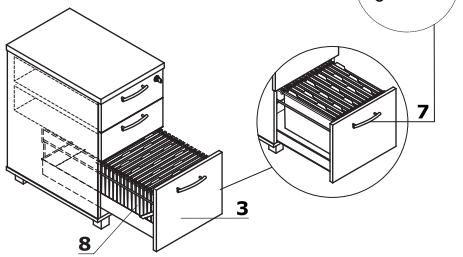

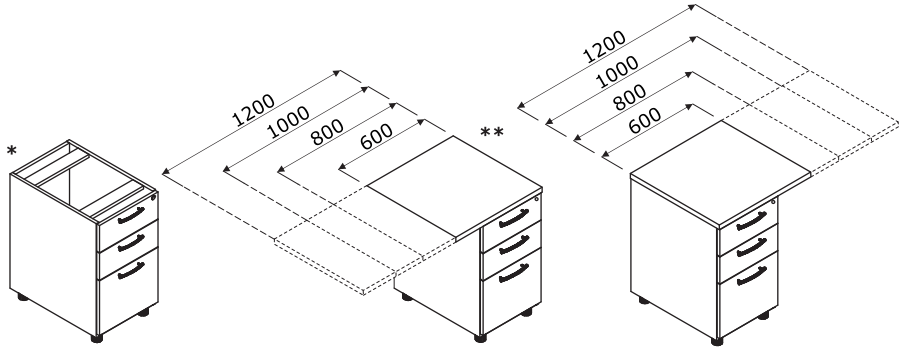

* Pedestals without tops

Mobile pedestals with separate pencil drawer

1 **Top** - MFC 18 mm, ABS edge
2 **Body** - MFC 18 mm, ABS edge
3 **Front** - MFC 18 mm, ABS edge
4 **Metal drawer** - roll runners, max load 25 kg, 80% extraction, anti-tilt mechanism; OPTION WITH EXTRA CHARGE - ball runners, soft-closing system
5 **Separate pencil drawer**
6 **Central lock** - foldable key
7 **Aluminum handle:**
- * Standard
- ** OPTION WITH EXTRA CHARGE - handle Pro - colour: white, black, aluminium

8 **Suspension files drawer** - ball runners, max load 30 kg, 100% extractionn, A4 folders can be situated parallelly and perpendicularly to the front
9 **Castors** - Ø50 mm, two with brakes

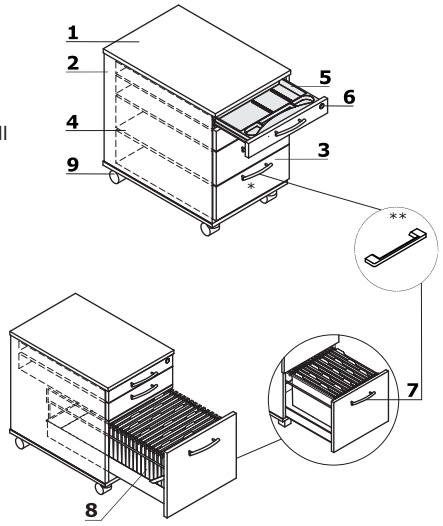

ATTENTION - sitting on the pedestal possible only after mounting the cushion (SKP13); the pedestal with cushion is intended for sitting only - moving the pedestal while sitting may result in damaging the castors

Stationary pedestals with separate pencil drawer

1 **Top** - MFC 28 mm, ABS edge
2 **Body** - MFC 18 mm, ABS edge
3 **Front** - MFC 18 mm, ABS edge
4 **Metal drawer** - roll runners, max load 25 kg, 80% extraction, anti-tilt mechanism; OPTION WITH EXTRA CHARGE - ball runners, soft-closing system
5 **Separate pencil drawer**
6 **Central lock** - foldable key
7 **Aluminum handle:**
- * Standard
- ** OPTION WITH EXTRA CHARGE - handle Pro - colour: white, black, aluminium

8 **Suspension files drawer** - ball runners, max load 30 kg, 100% extractionn, A4 folders can be situated parallelly and perpendicularly to the front
9 **Leveling** - 10 mm range

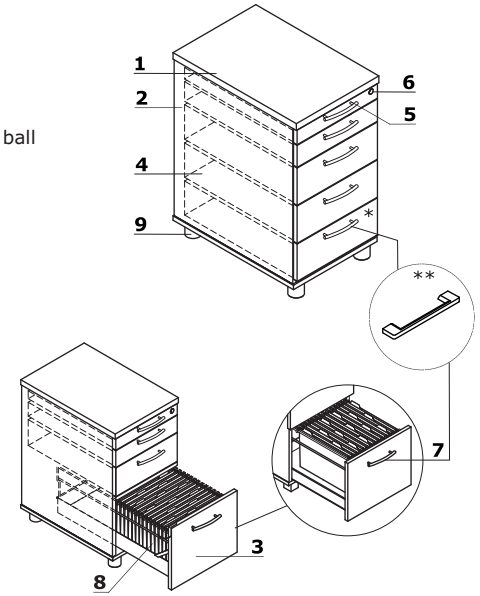

Mobile pedestal without handles

	Symbol	Price EUR	Dimensions			kg m3 pcs	Comments	Extra charge							
			Width	Depth	Height			Self closing system	Ball runners						
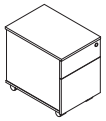	**SLD12**	**304,-**	416	600	586	23 kg 0.158 m3 1 pcs	mobile with susspension files drawer, drawers depth – 500 mm, all in colour: 08 - black, 26 – aluminium satinato, 67 – white pastel, 154 - anthracite	34,-	22,-						
	SLD120	**420,-**	416	800	586	26 kg 0.211 m3 1 pcs		34,-	22,-						
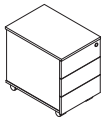	**SLD13**	**266,-**	416	600	586	23 kg 0.158 m3 1 pcs	mobile; drawers depth – 500 mm, all in colour: 08 - black, 26 – aluminium satinato, 67 – white pastel, 154 - anthracite	34,-	66,-						
	SLD130	**326,-**	416	800	586	27 kg 0.211 m3 1 pcs		34,-	66,-						

	Symbol	Price EUR	Dimensions			kg m3 pcs	Comments	Extra charge							
			Width	Depth	Height			II Price group	Self closing system	Ball runners	Handle PRO				
Mobile pedestals															
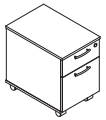	**KDT12**	**314,-**	402	600	586	30 kg 0.158 m3 1 pcs	mobile with susspension files drawer, drawers depth – 500 mm	49,-	34,-	22,-	10,-				
	KDT120	**404,-**	402	800	586	33 kg 0.211 m3 1 pcs	mobile with susspension files drawer;drawers depth: standard – 500 mm, file – 700 mm; file drawer without the push-to-open system	49,-	34,-	22,-	10,-				
	KDT13	**280,-**	402	600	586	23 kg 0.158 m3 1 pcs	mobile; drawers depth – 500 mm	49,-	34,-	66,-	15,-				
	KDT130	**304,-**	402	800	586	26 kg 0.211 m3 1 pcs	mobile; drawers depth – 500mm	49,-	34,-	66,-	15,-				
Stationary pedestals (mm)															
	KDT63	**358,-**	402	600	740	27 kg 0.225 m3 1 pcs	file drawer; drawers depth – 500 mm	49,-	34,-	44,-	15,-				
	KDT73	**420,-**	402	800	740	32 kg 0.312 m3 1 pcs	file drawer; drawers depth: standard – 500 mm, file – 700 mm; file drawer without the push-to-open system	49,-	34,-	44,-	15,-				
	KDT64	**340,-**	402	600	740	28 kg 0.225 m3 1 pcs	drawers depth – 500 mm	49,-	43,-	88,-	20,-				
	KDT74	**404,-**	402	800	740	33 kg 0.312 m3 1 pcs	drawers depth – 500mm	49,-	43,-	88,-	20,-				
Pedestals with top overhang 600 mm wide															
	KD663	**392,-**	600	600	740	33.9 kg 0.238 m3 4 pcs	file drawer, universal overhang left/right; drawers depth – 500 mm	49,-	34,-	44,-	15,-				
	KD673	**450,-**	600	800	740	38.6 kg 0.33 m3 4 pcs	file drawer, universal overhang left/right; drawers depth – 500mm; file drawer without the push-to-open system	49,-	34,-	44,-	15,-				
	KD664	**382,-**	600	600	740	33.9 kg 0.238 m3 4 pcs	universal overhang left/tight; drawers depth – 500mm	49,-	43,-	88,-	20,-				
	KD674	**438,-**	600	800	740	39.6 kg 0.33 m3 4 pcs	universal overhang left/tight; drawers depth – 500mm	49,-	43,-	88,-	20,-				

	Symbol	Price EUR	Dimensions			kg m3 pcs	Comments	Extra charge							
			Width	Depth	Height			II Price group	Self closing system	Ball runners	Handle PRO				
Pedestals with top overhang 800 mm wide															
	KD863	**398,-**	800	600	740	36.6 kg 0.243 m3 4 pcs	file drawer, universal overhang left/right; drawers depth – 500 mm	49,-	34,-	44,-	15,-				
	KD873	**454,-**	800	800	740	40.85 kg 0.336 m3 4 pcs	file drawer, universal overhang left/right; drawers depth: standard – 500 mm, file – 700 mm; file drawer without the push-to-open system	49,-	34,-	44,-	15,-				
	KD864	**388,-**	800	600	740	36.6 kg 0.243 m3 4 pcs	universal overhang left/tight; drawers depth – 500 mm	49,-	43,-	88,-	20,-				
	KD874	**442,-**	800	800	740	41.85 kg 0.336 m3 4 pcs	universal overhang left/tight; drawers depth – 500mm	49,-	43,-	88,-	20,-				
Pedestals with top overhang 1000 mm wide															
	KD1063	**404,-**	1000	600	740	38.4 kg 0.247 m3 4 pcs	file drawer, universal overhang left/right; drawers depth – 500 mm	49,-	34,-	44,-	15,-				
	KD1073	**460,-**	1000	800	740	43.75 kg 0.341 m3 4 pcs	file drawer, universal overhang left/right; drawers depth: standard – 500 mm, file – 700 mm; file drawer without the push-to-open system	49,-	34,-	44,-	15,-				
	KD1064	**392,-**	1000	600	740	38.4 kg 0.247 m3 4 pcs	universal overhang left/tight; drawers depth – 500 mm	49,-	43,-	88,-	20,-				
	KD1074	**450,-**	1000	800	740	44.75 kg 0.341 m3 4 pcs	universal overhang left/tight; drawers depth – 500mm	49,-	43,-	88,-	20,-				
Pedestals with top overhang 1200 mm wide															
	KD1263	**408,-**	1200	600	740	40.8 kg 0.251 m3 4 pcs	file drawer, universal overhang left/right; drawers depth – 500 mm	49,-	34,-	44,-	15,-				
	KD1273	**476,-**	1200	800	740	46.95 kg 0.347 m3 4 pcs	file drawer, universal overhang left/right; drawers depth: standard – 500 mm, file – 700 mm; file drawer without the push-to-open system	49,-	34,-	44,-	15,-				
	KD1264	**398,-**	1200	600	740	40.8 kg 0.251 m3 4 pcs	universal overhang left/tight; drawers depth – 500 mm	49,-	43,-	88,-	20,-				
	KD1274	**466,-**	1200	800	740	47.95 kg 0.347 m3 4 pcs	universal overhang left/tight; drawers depth – 500mm	49,-	43,-	88,-	20,-				

	Symbol	Price EUR	Dimensions			kg m3 pcs	Comments	Extra charge							
			Width	Depth	Height			II Price group	Self closing system	Ball runners	Handle PRO				
Pedestals without tops															
	KDT063	**340,-**	400	600	712	25 kg 0.225 m3 1 pcs	drawers depth – 500 mm	49,-	34,-	44,-	15,-				
	KDT073	**392,-**	400	800	712	27 kg 0.312 m3 1 pcs	drawers depth: standard – 500 mm, file – 700 mm; file drawer without the push-to-open system	49,-	34,-	44,-	15,-				
	KDT064	**330,-**	400	600	712	25 kg 0.225 m3 1 pcs	drawers depth – 500 mm	49,-	43,-	88,-	20,-				
	KDT074	**382,-**	400	800	712	28 kg 0.312 m3 1 pcs	drawers depth – 500mm	49,-	43,-	88,-	20,-				
Mobile pedestals with separate pencil drawer															
	KRT12	**368,-**	402	600	586	31 kg 0.158 m3 1 pcs	mobile with susspension files drawer, drawers depth – 500 mm	49,-	34,-	22,-	15,-				
	KRT120	**438,-**	402	800	586	27 kg 0.211 m3 1 pcs	mobile with susspension files drawer;drawers depth: standard – 500 mm, file – 700 mm; file drawer without the push-to-open system	49,-	34,-	22,-	15,-				
	KRT13	**326,-**	402	600	586	24 kg 0.158 m3 1 pcs	mobile; drawers depth – 500 mm	49,-	34,-	66,-	20,-				
	KRT130	**340,-**	402	800	586	28 kg 0.211 m3 1 pcs	mobile; drwers depth – 500mm	49,-	34,-	66,-	20,-				
Stationary pedestals with separate pencil drawer															
	KRT63	**392,-**	402	600	740	28 kg 0.225 m3 1 pcs	file drawer; drawers depth – 500 mm	49,-	34,-	44,-	20,-				
	KRT73	**460,-**	402	800	740	33 kg 0.312 m3 1 pcs	file drawer, universal overhang left/right; drawers depth: standard – 500 mm, file – 700 mm; file drawer without the push-to-open system	49,-	34,-	44,-	20,-				
	KRT64	**382,-**	402	600	740	29 kg 0.225 m3 1 pcs	drawers depth – 500 mm	49,-	43,-	88,-	25,-				
	KRT74	**438,-**	402	800	740	33 kg 0.312 m3 1 pcs	drawers depth – 500mm	49,-	43,-	88,-	25,-				

Copmplementary elements

	Symbol	Price EUR	Dimensions			kg m3 pcs	Comments	Extra charge							
			Width	Depth	Height			II Price group	III Price group	IV price group					
	SKP13	**92,-**	400	600	52	3.7 kg 0.017 m3 1 pcs	pedestal cushions (except KKT110 i KKT130)	14,-	29,-	41,-					
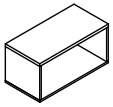	**A1L02**	**122,-**	800	402	389	18.8 kg 0.031 m3 1 pcs	stack-on storage for pedestal	44,-							
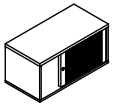	**A1L04P**	**318,-**	800	402	389	22.15 kg 0.152 m3 1 pcs	stack-on tambour storage for pedestal (with lock), opens left to right								
	A1L04L	**318,-**	800	402	389	21.6 kg 0.152 m3 1 pcs	stack-on tambour storage for pedestal (with lock), opens right to left								
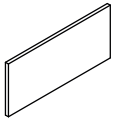	**PA1L**	**94,-**	761	341	22	2.9 kg 0.01 m3 1 pcs	fabric screen for storageA1L02 or A1L04P, A1L04L	14,-	29,-	41,-					
	HPR2	**44,-**	160	110	20	0.2 kg 0 m3 1 pcs	handles PRO (2 psc);								
	HPR3	**50,-**	160	110	20	0.2 kg 0 m3 1 pcs									

Fixing elements

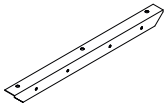	**E31**	**22,-**	620	30	30	0.62 kg 0.001 m3 1 pcs	angle bracket for 800 mm edges								
	E32	**18,-**	450	30	30	0.45 kg 0 m3 1 pcs	angle bracket for 600 mm edges								
	E37	**17,-**	330	30	30	1.5 kg 0 m3 1 pcs	angle bracket								

Colour combination - Standard - Cargo pedestals

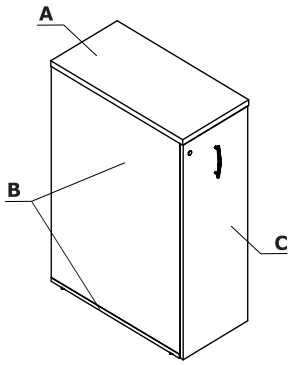

Material	Colour	Cargo pedestals														
		A - Top	B - Body, base	C - Front												
MFC	08 - black	✓	✓	✓												
	26 - aluminum satinato	✓	✓	✓												
	31 - canadian oak	✓	II group ✓	✓												
	39 - polar birch	✓	II group ✓	✓												
	64 - cocoa	✓	II group ✓	✓												
	67 - white pastel	✓	✓	✓												
	106 - lowland walnut	✓	II group ✓	✓												
	154 - anthracite	✓	✓	✓												
	167 - grey oak	✓	II group ✓	✓												
	168 - natural oak	✓	II group ✓	✓												
	169 - honey oak	✓	II group ✓	✓												
	170 - acacia	✓	II group ✓	✓												
	171 - dark walnut	✓	II group ✓	✓												

Cargo pedestals

1 **Top** - MFC 28 mm, ABS edge
2 **Body** - MFC 18 mm, ABS edge
3 **Front** - MFC 18 mm, ABS edge
4 **OPTION WITH EXTRA CHARGE** - Drawer - MFC 18 mm, max. 35 kg load, possible extraction 100%, possibility of hanging files, ball runners
5 **Movable vertical partition** - allows space organization
6 **Shelf** - MFC 18 mm, protection against accidental falling-out, ABS edge
7 **Pencil tray** - plastic, colour: black
8 **Back MFC** - 18 mm, ABS edges
9 **No back**
10 **Aluminum handle:**
- * Standard
- ** OPTION WITH EXTRA CHARGE - handle Pro - colour: white, black, aluminium

11 **Patent lock**
12 **Leveling** - 10 mm range
13 **Castors** - Ø75 mm
14 **Mediabox M09** - OPTION WITH ADDITIONAL CHARGE - 2x USB-A Charger 5V 2A
15 **OPTION WITH EXTRA CHARGE** - "dry-wipe board", colour: white
16 **MFC drawer** - ball runners, 100% extractionn
17 **Cable grommets** - Ø80 mm

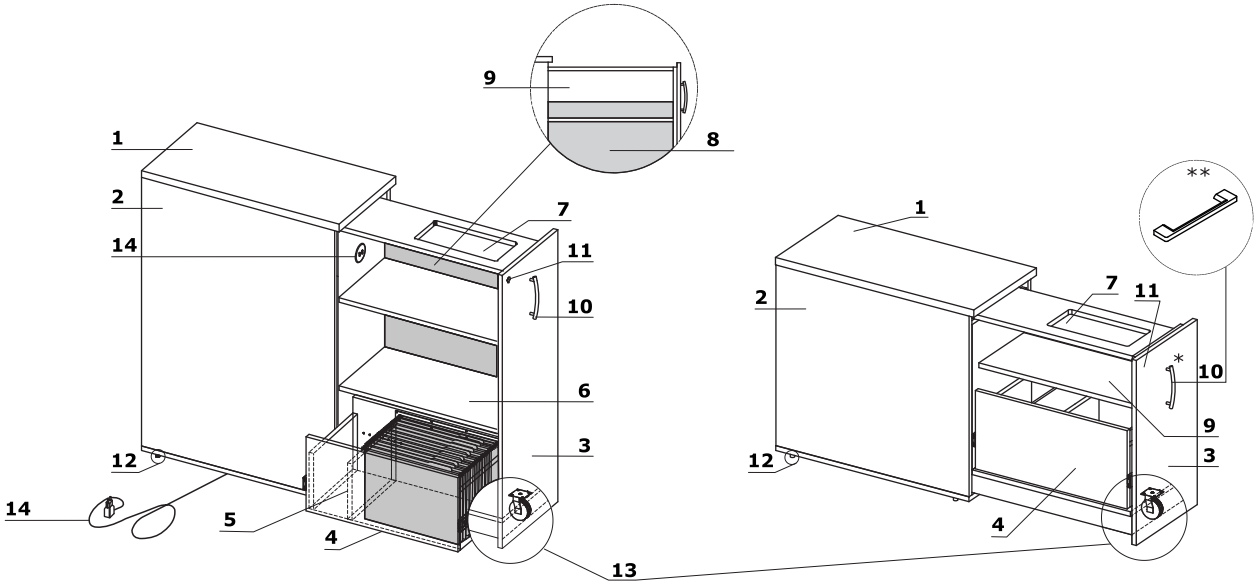

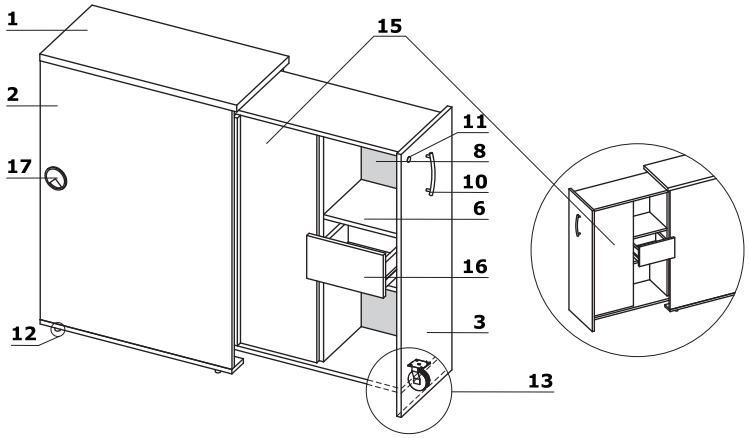

Cargo pedestals

	Symbol	Price EUR	Dimensions			kg m3 pcs	Comments	Extra charge							
			Width	Depth	Height			II Price group	Handle PRO	Drawer	Dry-wipe board	Mediabox M09			
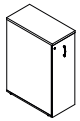	**KCD81P**	**610,-**	402	800	1129	71 kg 0.414 m3 1 pcs	access to shelves from right side	49,-	5,-	192,-		108,-			
	KCD81L	**610,-**	402	800	1129	71 kg 0.414 m3 1 pcs	access to shelves from left side	49,-	5,-	192,-		108,-			
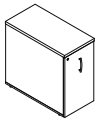	**KCN81P**	**575,-**	402	800	740	50 kg 0.275 m3 1 pcs	access to shelves from right side	49,-	5,-	192,-		108,-			
	KCN81L	**575,-**	402	800	740	50 kg 0.275 m3 1 pcs	access to shelves from left side	49,-	5,-	192,-		108,-			
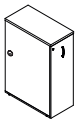	**KCD82**	**640,-**	402	800	1129	75 kg 0.414 m3 1 pcs	access to shelves from both sides	49,-	5,-		62,-				

Colour combination - Standard - locker type storage

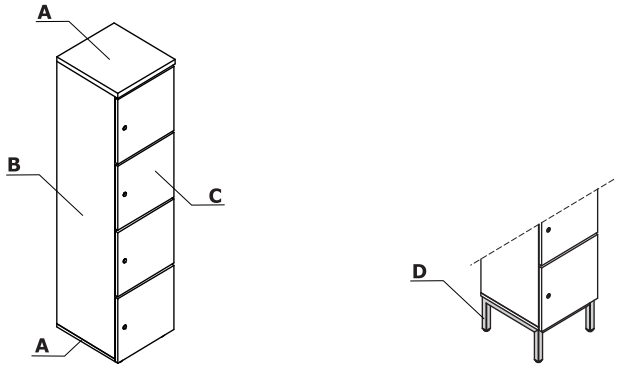

Material	Colour	Locker type storage													
		A - Top, base	B - Body	C - Front	D - brak										
MFC	08 - black	✓	✓												
	26 - aluminum satinato	✓	✓												
	31 - canadian oak	✓													
	39 - polar birch	✓													
	64 - cocoa	✓													
	67 - white pastel	✓	✓												
	154 - anthracite	✓	✓												
	167 - grey oak	✓													
	168 - natural oak	✓													
	169 - honey oak	✓													
	170 - acacia	✓													
	171 - dark walnut	✓													

Material	Colour	Locker type storage													
		A - Top, base	B - Body	C - Front	D - brak										
Metal	M009 - aluminium semi-matt RAL 9006				✓										
	M015 - white semi-matt RAL 9010				✓										
	M026 - olive semi-matte RAL 6013				II group ✓										
	M027 - blue semi-matte RAL5003				II group ✓										
	M028 - brick red semi-matte RAL 0404040				II group ✓										
	M029 - yellow semi-matte RAL 0807060				II group ✓										
	M030 - beige semi-matte RAL 0608005				II group ✓										
	M115 - black semi-matt RAL 9005				✓										
	M154 - anthracite semi-matt RAL 7043				✓										

Material	Colour	Locker type storage													
		A - Top, base	B - Body	C - Front											
HPL	08 - black			✓											
	26 - aluminum satinato			✓											
	31 - canadian oak			✓											
	39 - polar birch			✓											
	64 - cocoa			✓											
	67 - white pastel			✓											
	154 - anthracite			✓											
	167 - grey oak			✓											
	168 - natural oak			✓											
	169 - honey oak			✓											
	170 - acacia			✓											
	171 - dark walnut			✓											
	73 - white high gloss			✓											
	101 - black high gloss			✓											
	148 - grey high gloss			✓											
	155 - anthracite high gloss			✓											
	174 - beige matte			✓											
	175 - truffle matte			✓											
	176 - red matte			✓											
	177 - grey matte			✓											
	178 - avocado matte			✓											
	179 - bottle green matte			✓											
	180 - Prussian blue matte			✓											
	184 - sky-blue matte			✓											

Locker type storage

1 **Top** - MFC 28 mm, ABS edge 2mm
2 **Body** - MFC 18 mm, ABS edge
3 **Front** - MFC 18 mm + HPL
4 **Internal dimensions of one segment** - 364x388x373 mm
5 **Horizontal partition wall** - 18 mm laminated board, edging of ABS
6 **Opening for inserting sheets of paper** - slot 13 mm
7 **Patent lock** - OPTION WITH ADDITIONAL CHARGE - code, digital lock or card lock
8 **Base** - MFC 18 mm, ABS edge
9 **Leveling feet 27 mm** - range 5 mm
10 **Symbols** - important when choosing a colour, possibile to choose front in various colours
11 **Metal base** - powder coated, profile 30 x 30 mm

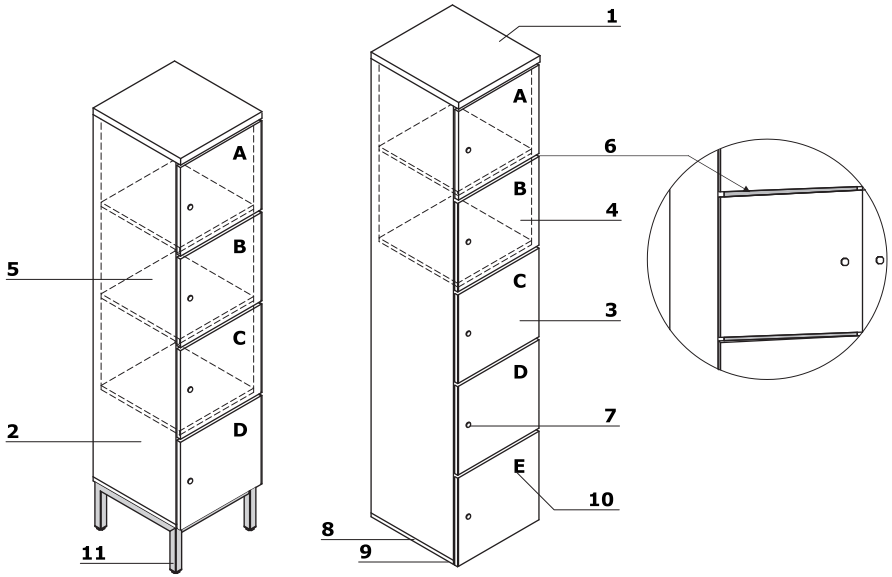

Locks for lockers (mm)

1 **Standard Digital Combination Lock**
- high level of safety:
  - 4 to 15-digit user's code
  - an alarm - after 4 unsuccessful attempts to open the lock
- lock works in two modes:
  - public mode (office; school);
  - private mode (deposit; swimming pool; fitness clubs);
- the lock is made of plastic
- the lock has an indicator of low battery level
- 3V CR 2032 battery
- it is also possible to recover a forgotten code in an emergency using the master key (purchased as a separate product)

2 **Code lock**
- lock works in two modes:
  - public mode (office; school);
  - private mode (deposit; swimming pool; fitness clubs);
- code search functio
- a straight bolt 37 mm

3 **Card lock**
- delivered together with a card and a manual
- work conditions: temperatures - 15°C to +65°C; humidity 10% to 90%
- closing / opening the cabinet requires putting a card next to it
- high level of security - by putting a wrong card five times, the lock gets blocked for 5 minutes
- the lock works in the varied user mode (deposit, swimming pool, fitness clubs)
- additional settings:
  - door open alarm and automatic unlock alarm when the time has expired
  - blockade of the possibility of opening two locks with one card
  - card validity period configuration - the card is automatically deactivated when the time has expired

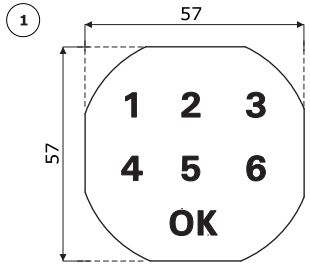

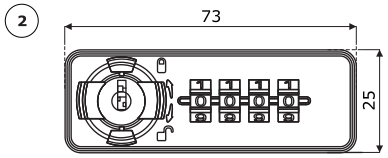

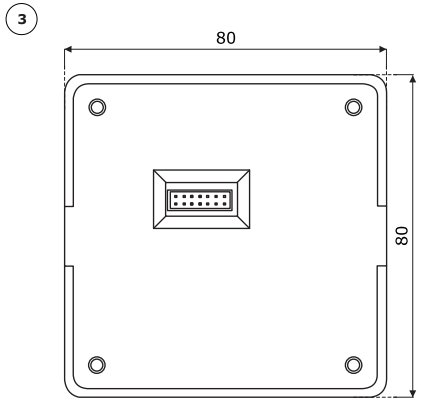

Locker type storage

	Symbol	Price EUR	Dimensions			kg m3 pcs	Comments	Extra charge							
			Width	Depth	Height			Code locks	Electronic locks	Card lock					
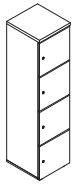	**LOK03**	**354,-**	402	432	1228	25 kg 0.236 m3 1 pcs	patent lock as standard, 3 OH	108,-	312,-	330,-					
	LOK04	**430,-**	402	432	1619	44.1 kg 0.308 m3 1 pcs	patent lock as standard, 4 OH	144,-	416,-	440,-					
	LOK05	**510,-**	402	432	2010	49.5 kg 0.384 m3 1 pcs	patent lock as standard, 5 OH	180,-	520,-	550,-					
	MSR1	**30,-**	100	100	20	0.1 kg 0 m3 1 pcs	for patent locklock; Upon receipt of the MASTER KEY, responsibility for its use is transferred to the customer. .mdd sp. z o.o., the manufacturer, and the supplier of the MASTER KEY are not responsible for damages resulting from sharing the MASTER KEY with users.								
	MSR2	**156,-**	100	100	20	0 kg 0 m3 0 pcs	for electronic lock; Upon receipt of the MASTER KEY, responsibility for its use is transferred to the customer. .mdd sp. z o.o., the manufacturer, and the supplier of the MASTER KEY are not responsible for damages resulting from sharing the MASTER KEY with users.								
	MSR3	**40,-**	100	100	20	0 kg 0 m3 0 pcs	for code lock; Upon receipt of the MASTER KEY, responsibility for its use is transferred to the customer. .mdd sp. z o.o., the manufacturer, and the supplier of the MASTER KEY are not responsible for damages resulting from sharing the MASTER KEY with users.								
	MSR4	**30,-**	100	100	20	0 kg 0 m3 0 pcs	unprogrammed card for the magnetic lock								

Metal base	Symbol	Price EUR	Dimensions			kg m3 pcs	Comments	Extra charge							
			Width	Depth	Height			II Price group							
	PM01	**130,-**	400	400	200	4 kg 0.037 m3 1 pcs		13,-							
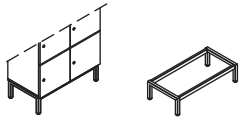	**PM02**	**142,-**	800	400	200	5 kg 0.072 m3 1 pcs		15,-							
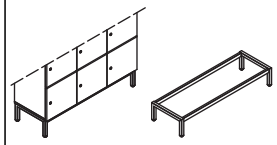	**PM03**	**152,-**	1200	400	200	6 kg 0.108 m3 1 pcs		17,-							
Felt basket															
	KF01	**49,-**	240	340	290	0.6 kg 0.029 m3 1 pcs									

Colour combination - Standard - managerial storages

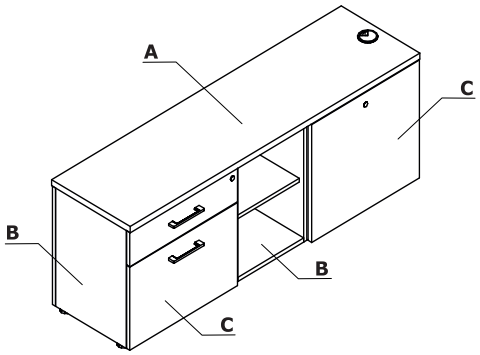

Material	Colour	Managerial storages														
		A - Top	B - Body, base	C - Front												
MFC	08 - black	✓	✓	✓												
	26 - aluminum satinato	✓	✓	✓												
	31 - canadian oak	✓	II group ✓	✓												
	39 - polar birch	✓	II group ✓	✓												
	64 - cocoa	✓	II group ✓	✓												
	67 - white pastel	✓	✓	✓												
	106 - lowland walnut	✓	II group ✓	✓												
	154 - anthracite	✓	✓	✓												
	167 - grey oak	✓	II group ✓	✓												
	168 - natural oak	✓	II group ✓	✓												
	169 - honey oak	✓	II group ✓	✓												
	170 - acacia	✓	II group ✓	✓												
	171 - dark walnut	✓	II group ✓	✓												

Managerial storages - A12M

1 **Top** - MFC 28 mm, ABS edge
2 **Body** - MFC 18 mm, ABS edge
3 **Front** - MFC 18 mm, ABS edge
4 **Metal drawer** - roll runners, max load 25 kg, 80% extraction, anti-tilt mechanism; OPTION WITH EXTRA CHARGE - ball runners, soft-closing system
5 **Suspension files drawer** - with bottom, ball runners, max load 45 kg, 100% extraction, Push-to-Open
6 **Drawer with bottom** - ball runners, max. load 40 kg, 100 % extraction, push-to-open, enough space for computer
7 **Patent lock**
8 **Central lock** - foldable key
9 **Cable grommets** - Ø80 mm
10 **Aluminum handle:**
- * Standard
- ** OPTION WITH EXTRA CHARGE - handle Pro - colour: white, black, aluminium

11 **Base** - MFC 18 mm, ABS edge
12 **Leveling feet** - range 5 mm

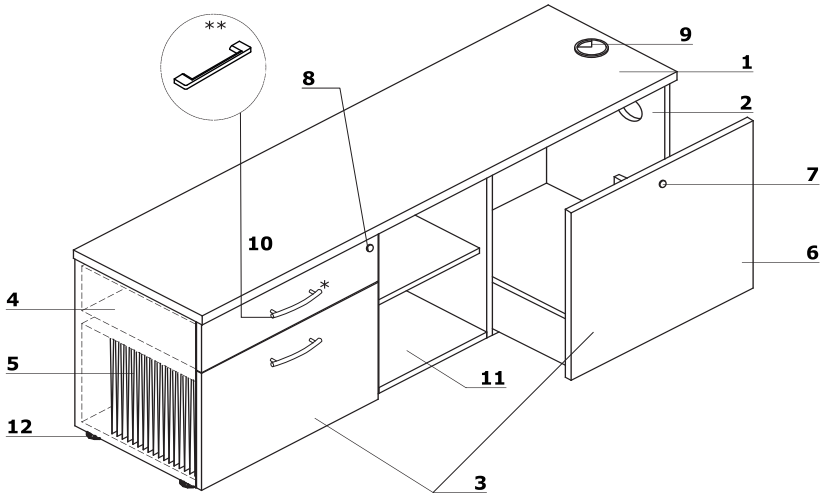

Managerial storage - A120ML, A120MP

1 **Top** - MFC 28 mm, ABS edge
2 **Body** - MFC 18 mm, ABS edge
3 **Front** - MFC 18 mm, ABS edge, plain hinge 110°
4 **MFC drawer** - roll runners, max load 25 kg, 80% extractio
5 **Pencil tray** - plastic, colour: black
6 **Shelf** - MFC 18 mm, protection against accidental falling-out, ABS edge
7 **Patent lock**
8 **Central lock** - foldable key
9 **Aluminum handle:**
- * Standard
- ** OPTION WITH EXTRA CHARGE - handle Pro - colour: white, black, aluminium

10 **Base** - MFC 18 mm, ABS edge
11 **Castors** - Ø50 mm, two with brakes

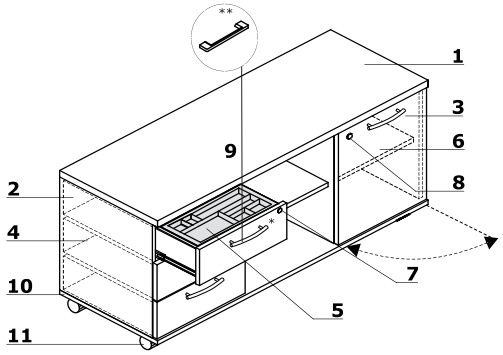

Managerial storage - A14M

1 **Top** - MFC 28 mm, ABS edge
2 **Body** - MFC 18 mm, ABS edge
3 **Sliding front** - MFC 18 mm, ABS edge
4 **Drawer** - MFC 18 mm, ABS edge, patent lock - possible to change location
5 **Shelf** - MFC 18 mm, protection against accidental falling-out, ABS edge
6 **Base** - MFC 18 mm, ABS edge
7 **Leveling feet** - range 5 mm
8 **OPTION WITH EXTRA CHARGE** - metal base - colour: M009 - aluminium semi-matt

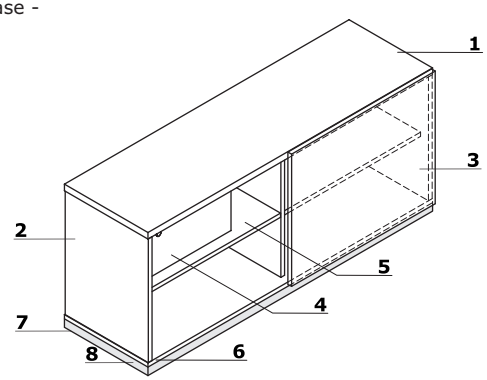

Managerial storages

	Symbol	Price EUR	Dimensions			kg m3 pcs	Comments	Extra charge							
			Width	Depth	Height			II Price group	Handle PRO	Metal kick plate					
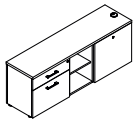	**A12M**	**805,-**	1600	434	600	93.5 kg 0.376 m3 4 pcs		44,-	10,-						
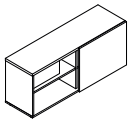	**A14M**	**460,-**	1400	432	600	70.65 kg 0.176 m3 5 pcs	universal storage left or right, adjustable shelves	44,-		64,-					
	A120ML	**416,-**	1200	432	599	51.85 kg 0.302 m3 1 pcs		44,-	20,-						
	A120MP	**416,-**	1200	432	599	50.35 kg 0.302 m3 1 pcs		44,-	20,-						

Accessories

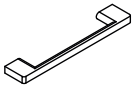	**HPR2**	**44,-**	160	110	20	0.2 kg 0 m3 1 pcs	handles PRO (2 psc);								
	HPR3	**50,-**	160	110	20	0.2 kg 0 m3 1 pcs									

Colour combination - Standard - managerial storage

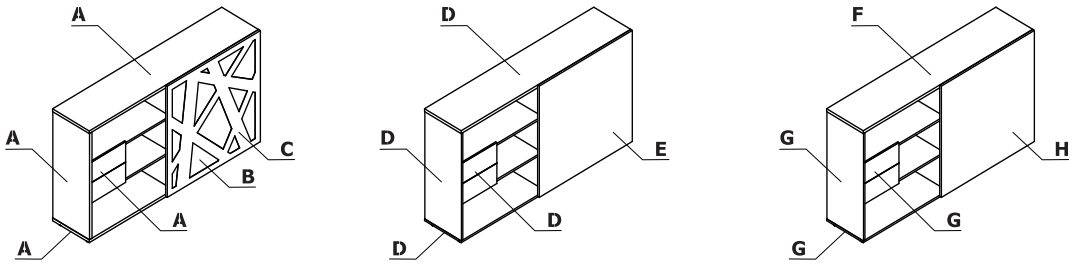

Material	Colour	Managerial storage - ZS01			Managerial storage - ZS02		Managerial storage - ZS03								
		A - Top, base, body	B - Front - HPL	C - Front - metal	D - Top, base, body	E - Front	F - Top, base	G - Body	H - Front						
MFC	08 - black				✓		✓	✓	✓						
	26 - aluminum satinato				✓		✓	✓	✓						
	31 - canadian oak						✓		✓						
	39 - polar birch						✓		✓						
	64 - cocoa						✓		✓						
	67 - white pastel	✓	White	M015 - white semi-matt RAL 9010	✓		✓	✓	✓						
	106 - lowland walnut						✓		✓						
	154 - anthracite				✓		✓	✓	✓						
	167 - grey oak						✓		✓						
	168 - natural oak						✓		✓						
	169 - honey oak						✓		✓						
	170 - acacia						✓		✓						
	171 - dark walnut						✓		✓						

Material	Colour	Managerial storage - ZS01			Managerial storage - ZS02		Managerial storage - ZS03								
		A - Top, base, body	B - Front - HPL	C - Front - metal	D - Top, base, body	E - Front	F - Top, base	G - Body	H - Front						
HPL	73 - white high gloss					✓									
	101 - black high gloss					✓									
	148 - grey high gloss					✓									
	155 - anthracite high gloss					✓									
	174 - beige matte					✓									
	175 - truffle matte					✓									
	176 - red matte					✓									
	177 - grey matte					✓									
	178 - avocado matte					✓									
	179 - bottle green matte					✓									
	180 - Prussian blue matte					✓									
	184 - sky-blue matte					✓									

Managerial storage

1 **Top** - MFC 28 mm, ABS edge
2 **Body** - MFC 28 mm, ABS edge
3 **Front** - sliding doors, metal self-closing mechanism, ABS edge
4 **Drawer** - MFC 12 mm, ABS edge, possible to change location
5 **Shelf** - MFC 18 mm, protection against accidental falling-out, ABS edge
6 **Base** - MFC 28 mm, ABS edge

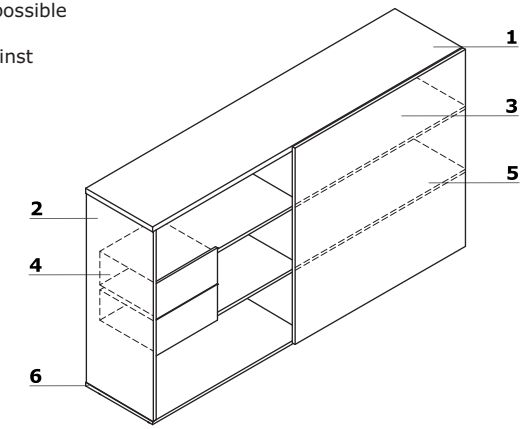

ZS01
- Front - combination of HPL and powder coated steel element

ZS02
- Front - MFC 18 mm, coated with HPL - mat, ABS edge

ZS03
- Front - MFC 18 mm, ABS edge

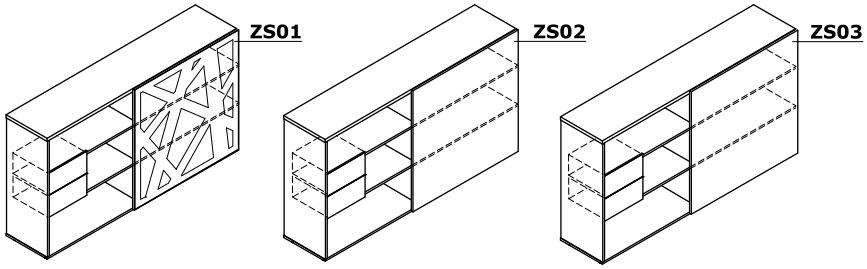

Note: The front width 1100 mm

Managerial storage

	Symbol	Price EUR	Dimensions			kg m3 pcs	Comments	Extra charge							
			Width	Depth	Height										
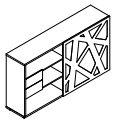	**ZS01**	**1465,-**	2000	434	1129	144.6 kg 0.341 m3 5 pcs	front Zig-Zag, cabinet with sliding door								
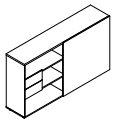	**ZS02**	**1130,-**	2000	434	1129	142.9 kg 0.341 m3 5 pcs	front HPL, cabinet with sliding door								
	ZS03	**985,-**	2000	434	1129	138.5 kg 0.341 m3 5 pcs	MFC front, cabinet with sliding door								
	ZSZ01	**122,-**	428	385	403	11.1 kg 0.075 m3 1 pcs	additional drawer for storage ZS01, ZS02, ZS03								

Colour combination - Standard - mobile storage - multifunction

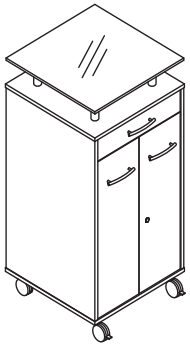

Material	Colour	Mobile storage A3R02													
		Whole													
MFC	08 - black	✓													
	26 - aluminum satinato	✓													
	67 - white pastel	✓													
	154 - anthracite	✓													

Mobile storage - multifunction

1 **Spacers** - 120 mm
2 **Body** - MFC 18 mm, ABS edge
3 **Castors** - Ø75 mm , two with brakes
4 **Front** - MFC 18 mm, ABS edge, plain hinge 110°
5 **Patent lock**
6 **Aluminum handle:**
- * Standard
- ** OPTION WITH EXTRA CHARGE - handle Pro - colour: white, black, aluminium

7 **Drawer** - 100% extractionn, metal, max load 30 kg, cutlery tray
8 **Top** - temepered frosted glass - 12 mm; painted on bottom

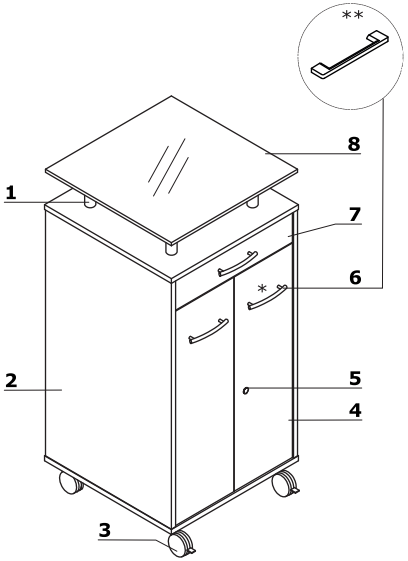

mdd.eu

Mobile storage - multifunction

	Symbol	Price EUR	Dimensions			kg m3 pcs	Comments	Extra charge							
			Width	Depth	Height			Handle PRO							
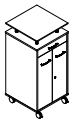	**A3R02**	**880,-**	550	550	1188	68.75 kg 0.176 m3 3 pcs		15,-							

Colour combination - Standard - storages and filing cabinets with metal shelves

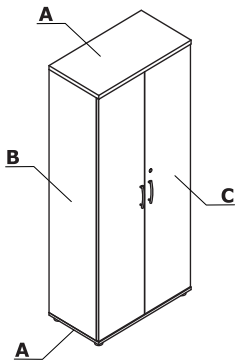

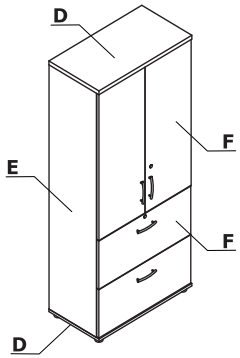

Material	Colour	File storages with metal shelves			Filing drawers storages										
		A - Top, base	B - Body	C - Front	D - Top, base	E - Body	F - Front								
MFC	08 - black	✓	✓	✓	✓	✓	✓								
	26 - aluminum satinato	✓	✓	✓	✓	✓	✓								
	31 - canadian oak	✓	II group ✓	✓	✓	II group ✓	✓								
	39 - polar birch	✓	II group ✓	✓	✓	II group ✓	✓								
	64 - cocoa	✓	II group ✓	✓	✓	II group ✓	✓								
	67 - white pastel	✓	✓	✓	✓	✓	✓								
	106 - lowland walnut	✓	II group ✓	✓	✓	II group ✓	✓								
	154 - anthracite	✓	✓	✓	✓	✓	✓								
	167 - grey oak	✓	II group ✓	✓	✓	II group ✓	✓								
	168 - natural oak	✓	II group ✓	✓	✓	II group ✓	✓								
	169 - honey oak	✓	II group ✓	✓	✓	II group ✓	✓								
	170 - acacia	✓	II group ✓	✓	✓	II group ✓	✓								
	171 - dark walnut	✓	II group ✓	✓	✓	II group ✓	✓								

Standard - storages and filing cabinets with metal shelves

Material	Colour	Filing drawers storages			Filing drawers storages										
		A - Top, base	B - Body	C - Front	D - Top, base	E - Body	F - Front								
HPL	73 - white high gloss						✓*								
	101 - black high gloss						✓*								
	148 - grey high gloss						✓*								
	155 - anthracite high gloss						✓*								
	174 - beige matte						✓*								
	175 - truffle matte						✓*								
	176 - red matte						✓*								
	177 - grey matte						✓*								
	178 - avocado matte						✓*								
	179 - bottle green matte						✓*								
	180 - Prussian blue matte						✓*								
	184 - sky-blue matte						✓*								

* top, base and body for this front finish are available only in following colours: 26- aluminium satinato, 67- white pastel, 154- anthracite, 08- black

Storages and filing cabinets with metal shelves

1 **Top** - MFC 28 mm, ABS edge; equipped with file frame
2 **Body** - MFC 18 mm, ABS edge
3 **Back MFC** - 18 mm, ABS edges
4 **Front** - MFC 18 mm, ABS edge, plain hinge 110°
5 **Metal shelf with possibility of using suspension files** - max load 41kg, colour: M009 - aluminium semi-matt
6 **OPTION WITH EXTRA CHARGE** - espagnolette lock - two-point
7 **Base** - MFC 18 mm, ABS edge
8 **Leveling feet 27 mm** - range 5 mm
9 **OPTION WITH EXTRA CHARGE** - metal base - colour: M009 - aluminium semi-matt
10 **Aluminum handle:**
- Standard
- OPTION WITH EXTRA CHARGE - Pro (vertical) - colour: white, black, aluminium
- OPTION WITH EXTRA CHARGE - Pro (horizontal) + espagnolette lock - colour: white, black, aluminium

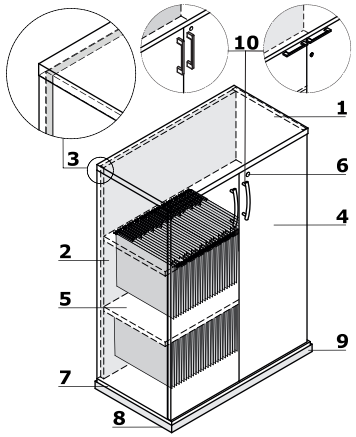

Filing drawers storages

1 **Top** - MFC 28 mm, ABS edge
2 **Body** - MFC 18 mm, ABS edge
3 **Front** - MFC 18 mm, ABS edge
4 **Suspension files drawer** - MFC 18 mm, ball runners, max load 45kg, 100% extraction
5 **Central lock** - foldable key
6 **Base** - MFC 18 mm, ABS edge
7 **Leveling feet 27 mm** - range 5 mm
8 **OPTION WITH EXTRA CHARGE** - metal base - colour: M009 - aluminium semi-matt
9 **Aluminum handle:**
- Standard
- ** OPTION WITH EXTRA CHARGE - handle Pro - colour: white, black, aluminium

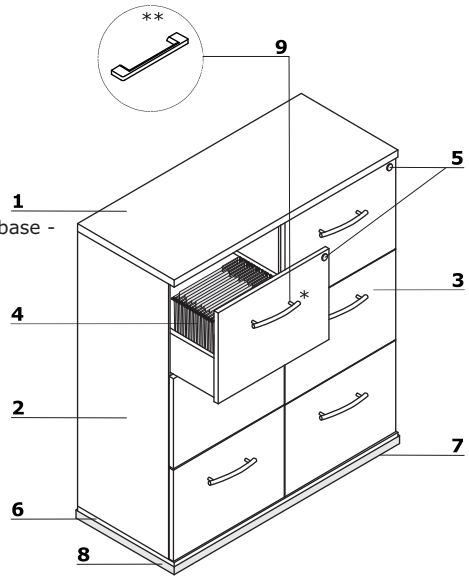

Filing drawers storages

1 **Top** - MFC 28 mm, ABS edge
2 **Body** - MFC 18 mm, ABS edge
3 **Front** - MFC 18 mm, ABS edge, plain hinge 110°
- Standard - vertical handle, aluminium
- Pro (OPTION WITH EXTRA CHARGE) - horizontal handle, aluminium, espagnolette lock - two-point
4 **Patent lock; OPTION WITH EXTRA CHARGE** - espagnolette lock
5 **Shelf** - MFC 18 mm, protection against accidental falling-out, ABS edge
6 **Suspension files drawer** - metal frame, ball runners, max load 55kg, 100% extractionn
7 **Base** - MFC 18 mm, ABS edge
8 **Leveling feet 27 mm** - range 5 mm
9 **Espagnolet lock** - two-point
10 **Possibility to place suspension files of A4 size**
11 **OPTION WITH EXTRA CHARGE** - metal base - colour: M009 - aluminium semi-matt
12 **Aluminum handle:**
- * Standard
- ** OPTION WITH EXTRA CHARGE - handle Pro - colour: white, black, aluminium

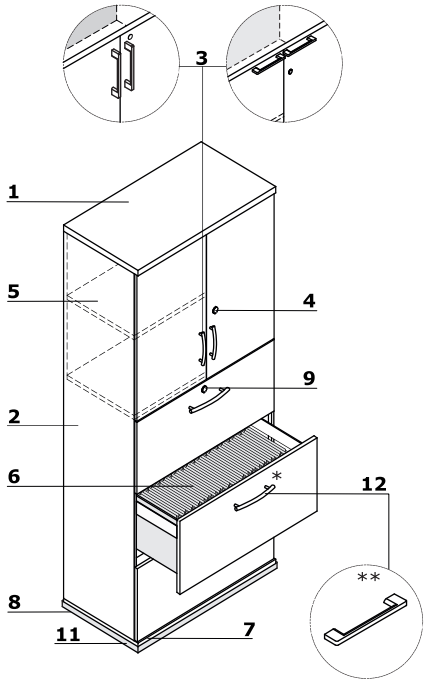

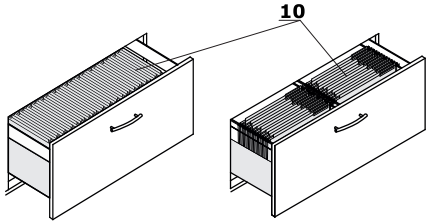

File storages with metal shelves

	Symbol	Price EUR	Dimensions			kg m3 pcs	Comments	Extra charge							
			Width	Depth	Height			II Price group	Metal kick plate	Angle hinge 170°	Pro handle (vertical)	Pro handle (horizontal) + espagnolette lock			
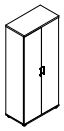	**A3104TM**	**300,-**	801	432	1129	62.1 kg 0.142 m3 4 pcs	2 metal shelves	49,-	48,-	24,-	10,-	56,-			
	A5104TM	**500,-**	801	432	1833	95.4 kg 0.228 m3 5 pcs	4 metal shelves, espagnolette lock	66,-	48,-	31,-	10,-	56,-			
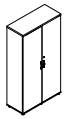	**A3105TM**	**376,-**	1000	432	1129	68.05 kg 0.168 m3 4 pcs	2 metal shelves	49,-	54,-	24,-	10,-	56,-			
	A5105TM	**595,-**	1000	432	1833	114.45 kg 0.247 m3 6 pcs	4 metal shelves, espagnolette lock	66,-	54,-	38,-	10,-	56,-			
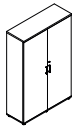	**A3106TM**	**398,-**	1200	432	1129	78.1 kg 0.208 m3 4 pcs	2 metal shelves	49,-	64,-	24,-	10,-	56,-			
	A5106TM	**675,-**	1200	432	1833	129.8 kg 0.288 m3 6 pcs	4 metal shelves, espagnolette lock	66,-	64,-	38,-	10,-	56,-			

File bookcases with metal shelves

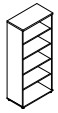	**A3504TM**	**232,-**	801	432	1129	44.25 kg 0.115 m3 3 pcs	3 metal shelves	49,-	48,-						
	A5504TM	**388,-**	801	432	1833	68.15 kg 0.18 m3 4 pcs	4 metal shelves	66,-	54,-						
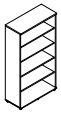	**A3505TM**	**294,-**	1000	432	1129	52.2 kg 0.13 m3 3 pcs	2 metal shelves	49,-	54,-						
	A5505TM	**438,-**	1000	432	1833	87.75 kg 0.187 m3 5 pcs	4 metal shelves	66,-	54,-						
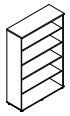	**A3506TM**	**316,-**	1200	432	1129	58.7 kg 0.163 m3 3 pcs	2 metal shelves	49,-	64,-						
	A5506TM	**525,-**	1200	432	1833	88.35 kg 0.202 m3 5 pcs	4 metal shelves	66,-	64,-						

Filing drawers storages

	Symbol	Price EUR	Dimensions			kg m3 pcs	Comments	Extra charge							
			Width	Depth	Height			II Price group	Handle PRO	Metal kick plate	Angle hinge 170°	Pro handle (vertical)	Pro handle (horizontal) + espagnolette lock		
	A3F04	**1050,-**	801	432	1129	68.35 kg 0.435 m3 2 pcs	suspension file drawers without bottom part	49,-	15,-	48,-					
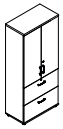	**A54B4**	**1070,-**	801	432	1833	86.95 kg 0.699 m3 2 pcs	suspension file drawers without bottom part, MFC shelf	66,-		48,-	24,-	20,-	66,-		
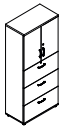	**A54C4**	**1310,-**	801	432	1833	72.5 kg 0.699 m3 2 pcs		66,-		48,-	24,-	25,-	71,-		
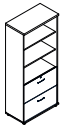	**A54D4**	**995,-**	801	432	1833	76.1 kg 0.699 m3 2 pcs		66,-	10,-	48,-					
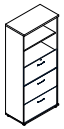	**A54E4**	**1250,-**	801	432	1833	80.6 kg 0.699 m3 2 pcs		66,-	15,-	48,-					
	A6F04	**1365,-**	1000	432	1129	108.2 kg 0.546 m3 2 pcs	suspension file drawers with bottom part	49,-	30,-	54,-					

Accessories	Symbol	Price EUR	Dimensions			kg m3 pcs	Comments	Extra charge							
			Width	Depth	Height										
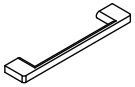	**HPR2**	**44,-**	160	110	20	0.2 kg 0 m3 1 pcs	handles PRO (2 psc);								
	HPR3	**50,-**	160	110	20	0.2 kg 0 m3 1 pcs									
Felt basket															
	KF01	**49,-**	240	340	290	0.6 kg 0.029 m3 1 pcs									

Colour combination - Standard - wardrobes

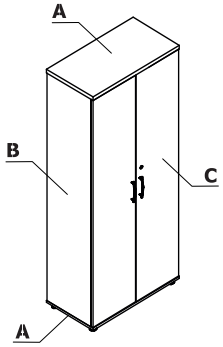

Material	Colour	Wardrobes														
		A - Top, base	B - Body	C - Front												
MFC	08 - black	✓	✓	✓												
	26 - aluminum satinato	✓	✓	✓												
	31 - canadian oak	✓	II group ✓	✓												
	39 - polar birch	✓	II group ✓	✓												
	64 - cocoa	✓	II group ✓	✓												
	67 - white pastel	✓	✓	✓												
	106 - lowland walnut	✓	II group ✓	✓												
	154 - anthracite	✓	✓	✓												
	167 - grey oak	✓	II group ✓	✓												
	168 - natural oak	✓	II group ✓	✓												
	169 - honey oak	✓	II group ✓	✓												
	170 - acacia	✓	II group ✓	✓												
	171 - dark walnut	✓	II group ✓	✓												

Wardrobes

1 **Top** - MFC 28 mm, ABS edge
2 **Body** - MFC 18 mm, ABS edge
3 **Back MFC** - 18 mm, ABS edges
4 **Front** - MFC 18 mm, ABS edge, plain hinge 110°
5 **Base** - MFC 18 mm, ABS edge
6 **OPTION WITH EXTRA CHARGE** - espagnolette lock - two-point
7 **Shelf** - MFC 18 mm, protection against accidental falling-out, ABS edge
8 **Leveling feet 27 mm** - range 5 mm
9 **OPTION WITH EXTRA CHARGE** - metal base - colour: M009 - aluminium semi-matt
10 **Aluminum handle:**
- Standard
- OPTION WITH EXTRA CHARGE - Pro (vertical) - colour: white, black, aluminium
- OPTION WITH EXTRA CHARGE - Pro (horizontal) + espagnolette lock - colour: white, black, aluminium

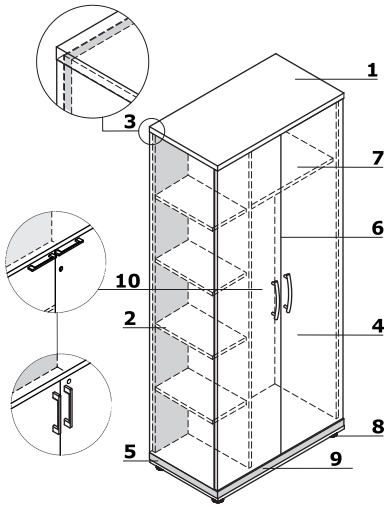

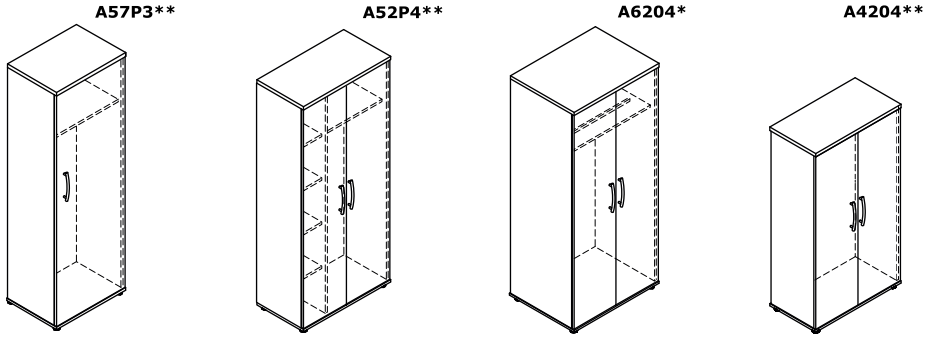

* Coat rod ** Slide-out hanger

	Symbol	Price EUR	Dimensions			kg m3 pcs	Comments	Extra charge							
			Width	Depth	Height			II Price group	Metal kick plate	Angle hinge 170°	Pro handle (vertical)	Pro handle (horizontal) + espagnolette lock			
Wardrobes															
	A57P3	**416,-**	602	432	1833	67.35 kg 0.199 m3 4 pcs	wardrobe with slide out hanger, option - left hand side or right hand side front; option with up charge - espagnolette lock in STANDARD handle (40€); in case of Pro handle (horizontal) the espagnolette lock is free of charge	66,-	48,-	24,-	5,-	51,-			
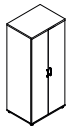	**A4204**	**416,-**	802	432	1481	60.6 kg 0.137 m3 4 pcs	wardrobe with slide out hanger, Standard handle - espagnolet lock - option with extra charge, 4 OH	54,-	48,-	31,-	10,-	56,-			
	A6204	**426,-**	801	600	1833	93.9 kg 0.21 m3 5 pcs	wardrobe with coat rod, Standard handle - espagnolet lock - option with extra charge, 5OH	66,-	48,-	31,-	10,-	56,-			
	A52P4	**450,-**	801	432	1833	93.15 kg 0.231 m3 5 pcs	wardrobe and file storage with slide out hanger, Standard handle - espagnolet lock - option with extra charge, 5OH	66,-	48,-	31,-	10,-	56,-			
Accessories															
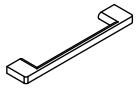	**HPR2**	**44,-**	160	110	20	0.2 kg 0 m3 1 pcs	handles PRO (2 psc);								
	HPR3	**50,-**	160	110	20	0.2 kg 0 m3 1 pcs									
Felt basket															
	KF01	**49,-**	240	340	290	0.6 kg 0.029 m3 1 pcs									

Colour combination - Standard - sliding door storages

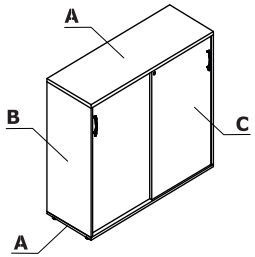

Material	Colour	Sliding door storages														
		A - Top, base	B - Body	C - Front												
MFC	08 - black	✓	✓	✓												
	26 - aluminum satinato	✓	✓	✓												
	31 - canadian oak	✓	II group ✓	✓												
	39 - polar birch	✓	II group ✓	✓												
	64 - cocoa	✓	II group ✓	✓												
	67 - white pastel	✓	✓	✓												
	106 - lowland walnut	✓	II group ✓	✓												
	154 - anthracite	✓	✓	✓												
	167 - grey oak	✓	II group ✓	✓												
	168 - natural oak	✓	II group ✓	✓												
	169 - honey oak	✓	II group ✓	✓												
	170 - acacia	✓	II group ✓	✓												
	171 - dark walnut	✓	II group ✓	✓												

Sliding door storages

1 **Top** - MFC 28 mm, ABS edge
2 **Body** - MFC 18 mm, ABS edge
3 **Back MFC** - 18 mm, ABS edges
4 **Sliding front** - MFC 18 mm, ABS edge
5 **Patent lock**
6 **Shelf** - MFC 18 mm, protection against accidental falling-out, ABS edge
7 **Base** - MFC 18 mm, ABS edge
8 **Leveling feet 27 mm** - range 5 mm
9 **OPTION WITH EXTRA CHARGE** - metal base - colour: M009 - aluminium semi-matt
10 **OPTION WITH EXTRA CHARGE** - soft-closing system
11 **Handle** - aluminium, ordered separately:
*handle Standard
**handle Pro

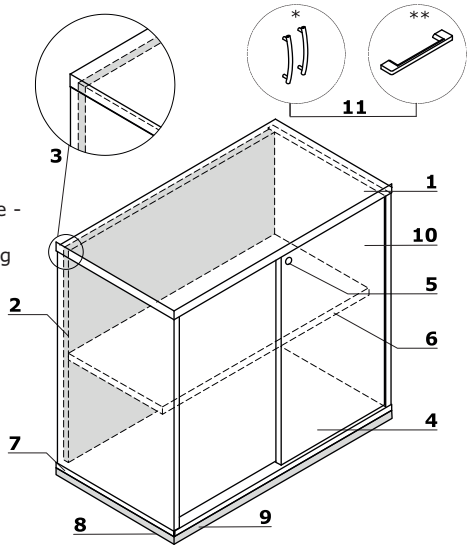

Sliding door storages

	Symbol	Price EUR	Dimensions			kg m3 pcs	Comments	Extra charge							
			Width	Depth	Height			II Price group	Self closing system	Handle PRO	Handle STANDARD	Metal kick plate			
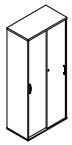	**A2P04**	**230,-**	800	432	740	44.25 kg 0.107 m3 4 pcs	2OH	44,-	88,-	20,-	12,-	48,-			
	A3P04	**304,-**	800	432	1129	56.7 kg 0.141 m3 4 pcs	3OH	49,-	88,-	20,-	12,-	48,-			
	A4P04	**382,-**	800	432	1481	71.35 kg 0.178 m3 5 pcs	4OH	54,-	88,-	20,-	12,-	48,-			
	A5P04	**505,-**	800	432	1833	94.25 kg 0.209 m3 6 pcs	5OH	66,-	88,-	20,-	12,-	48,-			
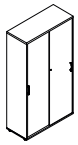	**A2P05**	**262,-**	1000	432	740	53 kg 0.127 m3 4 pcs	vertical partition, 2OH	44,-	88,-	20,-	12,-	54,-			
	A3P05	**348,-**	1000	432	1129	71.2 kg 0.165 m3 4 pcs	vertical partition, 3OH	49,-	88,-	20,-	12,-	54,-			
	A4P05	**430,-**	1000	432	1481	94.25 kg 0.204 m3 6 pcs	vertical partition, 4OH	54,-	88,-	20,-	12,-	54,-			
	A5P05	**585,-**	1000	432	1833	113.7 kg 0.241 m3 6 pcs	vertical partition, 5OH	66,-	88,-	20,-	12,-	54,-			
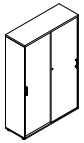	**A2P06**	**292,-**	1200	432	740	63.45 kg 0.142 m3 4 pcs	vertical partition, 2OH	44,-	88,-	20,-	12,-	64,-			
	A3P06	**392,-**	1200	432	1129	89.1 kg 0.19 m3 6 pcs	vertical partition, 3OH	49,-	88,-	20,-	12,-	64,-			
	A4P06	**480,-**	1200	432	1481	110.3 kg 0.238 m3 6 pcs	vertical partition, 4OH	54,-	88,-	20,-	12,-	64,-			
	A5P06	**655,-**	1200	432	1833	137.1 kg 0.276 m3 6 pcs	vertical partition, 5OH	66,-	88,-	20,-	12,-	64,-			

	Symbol	Price EUR	Dimensions			kg m3 pcs	Comments	Extra charge							
			Width	Depth	Height			II Price group	Self closing system	Handle PRO	Handle STANDARD	Metal kick plate			
Sliding door storages															
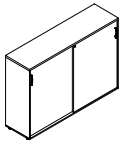	**A2P14**	**382,-**	1410	432	740	70.45 kg 0.172 m3 4 pcs	vertical partition, 2OH	44,-	88,-	20,-	12,-	68,-			
	A2P08	**392,-**	1600	432	740	76.15 kg 0.181 m3 4 pcs		44,-	88,-	20,-	12,-	72,-			
	A2P16	**408,-**	1610	432	740	76.95 kg 0.183 m3 4 pcs		44,-	88,-	20,-	12,-	76,-			
	A3P14	**510,-**	1410	432	1129	97.45 kg 0.215 m3 6 pcs	vertical partition, 3OH	49,-	88,-	20,-	12,-	64,-			
	A3P08	**540,-**	1600	432	1129	107.55 kg 0.24 m3 6 pcs		49,-	88,-	20,-	12,-	72,-			
	A3P16	**550,-**	1610	432	1129	106.55 kg 0.241 m3 6 pcs		49,-	88,-	20,-	12,-	76,-			
Stack-on storages with sliding door															
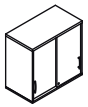	**A1P04**	**230,-**	800	432	750	41.6 kg 0.095 m3 4 pcs	stack-on storage, 2OH	44,-	88,-	20,-	12,-				
	A1P05	**262,-**	1000	432	750	52.55 kg 0.123 m3 4 pcs	vertical partition, 2OH, stack-on storage	44,-	88,-	20,-	12,-				
	A1P06	**304,-**	1200	432	750	64.3 kg 0.146 m3 4 pcs	vertical partition, 2OH, stack-on storage	44,-	88,-	20,-	12,-				
Accessories															
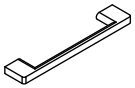	**HPR2**	**44,-**	160	110	20	0.2 kg 0 m3 1 pcs	handles PRO (2 psc);								
	HPR3	**50,-**	160	110	20	0.2 kg 0 m3 1 pcs									
Felt basket															
	KF01	**49,-**	240	340	290	0.6 kg 0.029 m3 1 pcs									

Colour combination - Standard - tambour storages

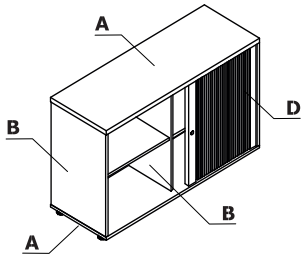

Material	Colour	Tambour storages													
		A - Top, base	B - Body	C - Front	D - Tambour front										
MFC	08 - black	✓	✓	✓	✓										
	26 - aluminum satinato	✓	✓	✓	✓										
	31 - canadian oak	✓	II group ✓	✓											
	39 - polar birch	✓	II group ✓	✓											
	64 - cocoa	✓	II group ✓	✓											
	67 - white pastel	✓	✓	✓	✓										
	106 - lowland walnut	✓	II group ✓	✓											
	154 - anthracite	✓	✓	✓	✓										
	167 - grey oak	✓	II group ✓	✓											
	168 - natural oak	✓	II group ✓	✓											
	169 - honey oak	✓	II group ✓	✓											
	170 - acacia	✓	II group ✓	✓											
	171 - dark walnut	✓	II group ✓	✓											

Tambour storages

1 **Top** - MFC 28 mm, ABS edge
2 **Shelf** - MFC 18 mm, protection against accidental falling-out, ABS edge
3 **Body** - MFC 18 mm, ABS edge
4 **Base** - MFC 18 mm, ABS edge
5 **Leveling feet 27 mm** - range 5 mm
6 **Patent lock**
7 **Front** - tambour
8 **OPTION WITH EXTRA CHARGE** - metal base - colour: M009 - aluminium semi-matt

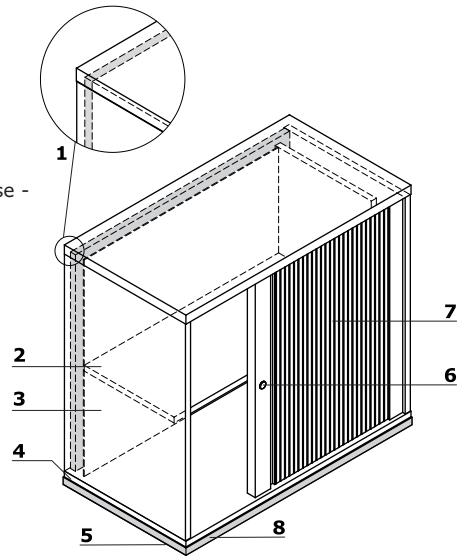

mdd.eu

Tambour storages

	Symbol	Price EUR	Dimensions			kg m3 pcs	Comments	Extra charge							
			Width	Depth	Height			II Price group	Metal kick plate						
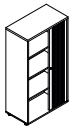	**A2L04**	**450,-**	800	432	740	42.35 kg 0.318 m3 2 pcs	2OH	44,-	48,-						
	A3L04	**620,-**	800	432	1129	58.7 kg 0.467 m3 2 pcs	3OH	49,-	48,-						
	A4L04	**770,-**	800	432	1481	65.2 kg 0.613 m3 2 pcs	4OH	54,-	48,-						

Tambour storages

	Symbol	Price EUR	Dimensions			kg m3 pcs	Comments	Extra charge							
			Width	Depth	Height			II Price group	Metal kick plate						
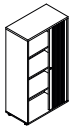	**A2L05**	**510,-**	1000	432	740	48.85 kg 0.41 m3 2 pcs	vertical partition, 2OH	44,-	54,-						
	A3L05	**695,-**	1000	432	1129	65 kg 0.581 m3 2 pcs	vertical partition, 3OH	49,-	54,-						
	A4L05	**820,-**	1000	432	1481	82.5 kg 0.741 m3 3 pcs	vertical partition, 4OH	54,-	54,-						
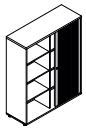	**A2L06**	**570,-**	1200	432	740	78.8 kg 0.485 m3 2 pcs	vertical partition, 2OH	44,-	64,-						
	A3L06	**760,-**	1200	432	1129	89.25 kg 0.695 m3 2 pcs	vertical partition, 3OH	49,-	64,-						
	A4L06	**855,-**	1200	432	1481	93.35 kg 0.887 m3 3 pcs	vertical partition, 4OH	54,-	64,-						
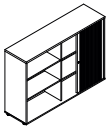	**A2L08**	**750,-**	1600	432	740	70.5 kg 0.645 m3 2 pcs	vertical partition, 2OH	44,-	72,-						
	A3L08	**1010,-**	1600	432	1129	96.35 kg 0.923 m3 2 pcs	vertical partition, 3OH	49,-	72,-						
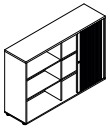	**A2L16**	**760,-**	1610	432	740	68.7 kg 0.648 m3 2 pcs	vertical partition, 2OH	44,-	76,-						
	A3L16	**1025,-**	1610	432	1129	89.9 kg 0.929 m3 2 pcs	vertical partition, 3OH	49,-	76,-						
Felt basket															
	KF01	**49,-**	240	340	290	0.6 kg 0.029 m3 1 pcs									

Colour combination - Standard - storages

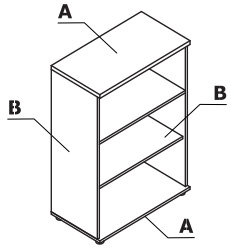

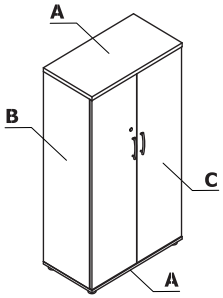

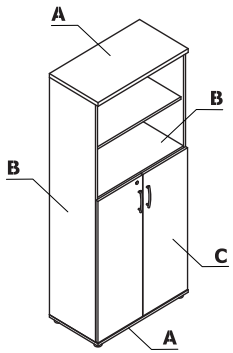

Material	Colour	Storages														
		A - Top, base	B - Body	C - Front												
MFC	08 - black	✓	✓	✓												
	26 - aluminum satinato	✓	✓	✓												
	31 - canadian oak	✓	II group ✓	✓												
	39 - polar birch	✓	II group ✓	✓												
	64 - cocoa	✓	II group ✓	✓												
	67 - white pastel	✓	✓	✓												
	106 - lowland walnut	✓	II group ✓	✓												
	154 - anthracite	✓	✓	✓												
	167 - grey oak	✓	II group ✓	✓												
	168 - natural oak	✓	II group ✓	✓												
	169 - honey oak	✓	II group ✓	✓												
	170 - acacia	✓	II group ✓	✓												
	171 - dark walnut	✓	II group ✓	✓												

Storages

1 **Top** - MFC 28 mm, ABS edge
2 **Back MFC** - 18 mm, ABS edges
3 **Body** - MFC 18 mm, ABS edge
4 **Shelf** - MFC 18 mm, protection against accidental falling-out, ABS edge
5 **Base** - MFC 18 mm, ABS edge
6 **Leveling feet 27 mm** - range 5 mm
7 **OPTION WITH EXTRA CHARGE** - espagnolette lock - two-point
8 **Front** - MFC 18 mm, ABS edge, plain hinge 110°
9 **Aluminum handle:**
- Standard
- OPTION WITH EXTRA CHARGE - Pro (vertical) - colour: white, black, aluminium
- OPTION WITH EXTRA CHARGE - Pro (horizontal) + espagnolette lock - colour: white, black, aluminium

10 **OPTION WITH EXTRA CHARGE** - metal base - colour: M009 - aluminium semi-matt

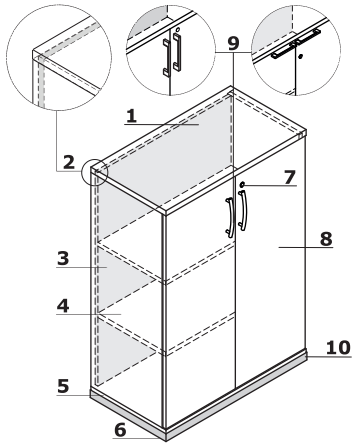

Storages

Symbol	Price EUR	Dimensions			kg m3 pcs	Comments	Extra charge							
		Width	Depth	Height			II Price group	Metal kick plate	Angle hinge 170°	Pro handle (vertical)	Pro handle (horizontal) + espagnolette lock			
A26P2	**184,-**	402	432	777	26.35 kg 0.056 m3 3 pcs	2OH; option - left hand side or right hand side front	44,-	48,-	18,-	5,-	51,-			
A36P2	**184,-**	402	432	1129	33.35 kg 0.072 m3 3 pcs	3OH; option - left hand side or right hand side front	49,-	48,-	18,-	5,-	51,-			
A56P2	**256,-**	402	432	1833	84.4 kg 0.169 m3 7 pcs	5OH; Standard handle - OPTION WITH EXTRA CHARGE - espagnolet lock (42 €); option - left hand side or right hand side front	66,-	48,-	21,-	5,-	51,-			

Storages

	Symbol	Price EUR	Dimensions			kg m3 pcs	Comments	Extra charge							
			Width	Depth	Height			II Price group	Metal kick plate	Angle hinge 170°	Pro handle (vertical)	Pro handle (horizontal) + espagnolette lock			
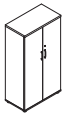	**A21B4**	**204,-**	801	432	740	41.95 kg 0.105 m3 4 pcs	2OH	44,-	48,-	24,-	10,-	56,-			
	A2104	**204,-**	801	432	777	46.7 kg 0.105 m3 4 pcs	2OH	44,-	48,-	24,-	10,-	56,-			
	A3104	**266,-**	801	432	1129	59.7 kg 0.13 m3 4 pcs	3OH	49,-	48,-	24,-	10,-	56,-			
	A4104	**354,-**	801	432	1481	74.65 kg 0.162 m3 4 pcs	4OH; Handle Standard - OPTION WITH EXTRA CHARGE - espagnolet lock (40 €)	54,-	48,-	31,-	10,-	56,-			
	A5104	**388,-**	801	432	1833	99.5 kg 0.206 m3 6 pcs	5OH; Handle Standard - OPTION WITH EXTRA CHARGE - espagnolet lock (40 €)	66,-	48,-	31,-	10,-	56,-			
	A6104	**476,-**	801	432	2185	108.95 kg 0.241 m3 6 pcs	6OH; Handle Standard - OPTION WITH EXTRA CHARGE - espagnolet lock (40 €)	78,-	48,-	38,-	10,-	56,-			
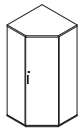	**A5NP4**	**730,-**	802	802	1833	116.9 kg 0.275 m3 5 pcs	corner storage, espagnolette lock, 5OH; option - left hand side or right hand side front	66,-	48,-		5,-	51,-			
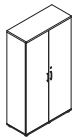	**A3105**	**354,-**	1000	432	1129	76.05 kg 0.156 m3 4 pcs	vertical partition, 3OH	49,-	54,-	24,-	10,-	56,-			
	A5105	**550,-**	1000	432	1833	116.55 kg 0.241 m3 6 pcs	espagnolette lock, vertical partition, 5OH	66,-	54,-	38,-	10,-	10,-			
	A6105	**620,-**	1000	432	2185	137.4 kg 0.277 m3 6 pcs	espagnolette lock, vertical partition, 6OH	78,-	54,-	38,-	10,-	10,-			
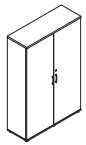	**A3106**	**376,-**	1200	432	1129	89 kg 0.19 m3 6 pcs	vertical partition, 3OH	49,-	64,-	24,-	10,-	56,-			
	A5106	**655,-**	1200	432	1833	132.1 kg 0.277 m3 6 pcs	espagnolette lock, vertical partition, 5OH	66,-	64,-	38,-	10,-	10,-			
	A6106	**695,-**	1200	432	2185	153.4 kg 0.319 m3 6 pcs	espagnolette lock, vertical partition, 6OH	78,-	64,-	38,-	10,-	10,-			

	Symbol	Price EUR	Dimensions			kg m3 pcs	Comments	Extra charge							
			Width	Depth	Height			II Price group	Metal kick plate	Angle hinge 170°	Pro handle (vertical)	Pro handle (horizontal) + espagnolette lock			
Desk cabinet															
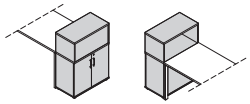	**A3404B**	**304,-**	801	432	1129	54.8 kg 0.124 m3 4 pcs	The rack is accessible from the worktop side. The cabinet is accessible from the other side. Horizontal partition (above the door) – 28 mm thick, always in the colour of the upper desktop.	66,-	48,-	24,-	10,-	56,-			
Bookcases															
	A2902	**122,-**	402	432	777	26.15 kg 0.047 m3 3 pcs	2OH	44,-	48,-						
	A3902	**144,-**	402	432	1129	29 kg 0.065 m3 3 pcs	3OH	49,-	48,-						
	A5902	**204,-**	402	432	1833	42.45 kg 0.09 m3 3 pcs	5OH	66,-	48,-						
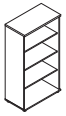	**A25B4**	**144,-**	801	432	740	34.45 kg 0.084 m3 3 pcs	2OH	44,-	48,-						
	A2504	**144,-**	801	432	777	35 kg 0.084 m3 3 pcs	2OH	44,-	48,-						
	A3504	**194,-**	801	432	1129	46.15 kg 0.102 m3 3 pcs	3OH	49,-	48,-						
	A4504	**224,-**	801	432	1481	57.65 kg 0.127 m3 3 pcs	4OH	54,-	48,-						
	A5504	**246,-**	801	432	1833	69.9 kg 0.185 m3 4 pcs	5OH	66,-	48,-						
	A6504	**326,-**	801	432	2185	89.8 kg 0.184 m3 5 pcs	6OH	78,-	48,-						
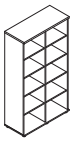	**A3505**	**266,-**	1000	432	1129	56.95 kg 0.136 m3 3 pcs	vertical partition, 3OH	49,-	54,-						
	A5505	**398,-**	1000	432	1833	90.6 kg 0.183 m3 5 pcs	vertical partition, 5OH	66,-	54,-						
	A6505	**460,-**	1000	432	2185	103.05 kg 0.208 m3 5 pcs	vertical partition, 6OH	78,-	54,-						

Bookcases

	Symbol	Price EUR	Dimensions			kg m3 pcs	Comments	Extra charge							
			Width	Depth	Height			II Price group	Metal kick plate	Angle hinge 170°	Pro handle (vertical)	Pro handle (horizontal) + espagnolette lock			
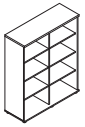	**A2506**	**236,-**	1200	432	777	48.35 kg 0.123 m3 3 pcs	vertical partition, 2OH	44,-	64,-						
	A3506	**296,-**	1200	432	1129	67.15 kg 0.15 m3 4 pcs	vertical partition, 3OH	49,-	64,-						
	A4506	**398,-**	1200	432	1481	84 kg 0.179 m3 5 pcs	vertical partition, 4OH	54,-	48,-						
	A5506	**426,-**	1200	432	1833	101.7 kg 0.205 m3 5 pcs	vertical partition, 5OH	66,-	64,-						
	A6506	**490,-**	1200	432	2185	115.75 kg 0.213 m3 5 pcs	vertical partition, 6OH	78,-	64,-						
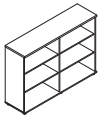	**A2508**	**308,-**	1600	432	777	60.05 kg 0.147 m3 3 pcs	vertical partition, 2OH	44,-	72,-						
	A3508	**376,-**	1600	432	1129	82.65 kg 0.183 m3 5 pcs	vertical partition, 3OH	49,-	72,-						

Half bookcases

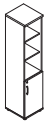	**A38P2**	**174,-**	402	432	1129	35 kg 0.075 m3 3 pcs	3OH (1OH open + 2OH with doors); option - left hand side or right hand side front	49,-	48,-	18,-	5,-	51,-			
	A58P2	**236,-**	402	432	1833	46.8 kg 0.102 m3 3 pcs	5OH (3OH open + 2OH with doors); option - left hand side or right hand side front	66,-	48,-	18,-	5,-	51,-			
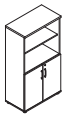	**A3404**	**256,-**	801	432	1129	58 kg 0.122 m3 4 pcs	3OH (1OH open + 2OH with doors)	49,-	48,-	24,-	10,-	56,-			
	A4304	**308,-**	801	432	1481	71.8 kg 0.166 m3 5 pcs	4OH (1OH open + 3OH with doors)	54,-	48,-	24,-	10,-	56,-			
	A4404	**286,-**	801	432	1481	69.15 kg 0.159 m3 5 pcs	4OH (2OH open + 2OH with doors)	54,-	48,-	24,-	10,-	56,-			
	A5304	**340,-**	801	432	1833	84 kg 0.187 m3 5 pcs	5OH (2OH open + 3OH with doors)	66,-	48,-	24,-	10,-	56,-			
	A5404	**326,-**	801	432	1833	78.9 kg 0.181 m3 5 pcs	5OH (3OH open + 2OH with doors)	66,-	48,-	24,-	10,-	56,-			

Stack-on storages 2OH

	Symbol	Price EUR	Dimensions			kg m3 pcs	Comments	Extra charge							
			Width	Depth	Height			II Price group	Angle hinge 170°	Pro handle (vertical)	Pro handle (horizontal) + espagnolette lock				
	A16P2	**156,-**	402	432	750	23.65 kg 0.048 m3 2 pcs	option - left hand side or right hand side front	44,-	18,-	5,-	51,-				
	A16P3	**236,-**	602	432	750	31.35 kg 0.067 m3 2 pcs	stack-on storage 2OH; option - left hand side or right hand side front	44,-		5,-	51,-				
	A1104	**204,-**	801	432	750	42.8 kg 0.072 m3 3 pcs		44,-	24,-	10,-	56,-				
	A1204	**252,-**	801	600	750	49.4 kg 0.098 m3 3 pcs		44,-	24,-	10,-	56,-				
	A1NP4	**376,-**	802	802	750	53.15 kg 0.138 m3 3 pcs	corner storage; option - left hand side or right hand side front	44,-		5,-	51,-				
	A1902	**122,-**	402	432	750	20.45 kg 0.041 m3 2 pcs		44,-							
	A1504	**144,-**	801	432	750	33.25 kg 0.071 m3 2 pcs		44,-							

Accessories	Symbol	Price EUR	Dimensions			kg m3 pcs	Comments	Extra charge							
			Width	Depth	Height										
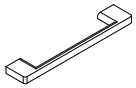	**HPR2**	**44,-**	160	110	20	0.2 kg 0 m3 1 pcs	handles PRO (2 psc);								
	HPR3	**50,-**	160	110	20	0.2 kg 0 m3 1 pcs									
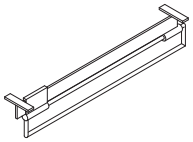	**S86**	**24,-**	300	0	0	0.2 kg 0.002 m3 1 pcs									
Felt basket															
	KF01	**49,-**	240	340	290	0.6 kg 0.029 m3 1 pcs									

Colour combination - Standard - glass door storages

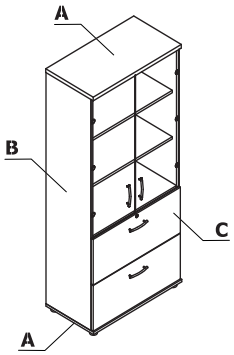

Material	Colour	Glass door storages														
		A - Top, base	B - Body	C - Front												
MFC	08 - black	✓	✓	✓												
	26 - aluminum satinato	✓	✓	✓												
	31 - canadian oak	✓	II group ✓	✓												
	39 - polar birch	✓	II group ✓	✓												
	64 - cocoa	✓	II group ✓	✓												
	67 - white pastel	✓	✓	✓												
	106 - lowland walnut	✓	II group ✓	✓												
	154 - anthracite	✓	✓	✓												
	167 - grey oak	✓	II group ✓	✓												
	168 - natural oak	✓	II group ✓	✓												
	169 - honey oak	✓	II group ✓	✓												
	170 - acacia	✓	II group ✓	✓												
	171 - dark walnut	✓	II group ✓	✓												

Glass door storages

1 **Top** - MFC 28 mm, ABS edge
2 **Back MFC** - 18 mm, ABS edges
3 **Body** - MFC 18 mm, ABS edge
4 **Shelf** - MFC 18 mm, protection against accidental falling-out, ABS edge
5 **Base** - MFC 18 mm, ABS edge
6 **Leveling feet 27 mm** - range 5 mm
7 **Patent lock**
8 **Glass front** - basic version AS31 - glass door 3OH, transparent tempered glass 4 mm; universal (left, right)
OPTION WITH EXTRA CHARGE:
- **IM300** - glass door 3OH, transparent tempered glass 4 mm, with aluminum frame
- **AS300** - glass door 3OH, frosted tempered glass 4 mm, with aluminum frame
- **AS29** - Glass door 3OH - frosted tempered glass 4 mm, with aluminum frame, right
- **AS30** - Glass door 3OH - frosted tempered glass 4 mm, with aluminum frame, left
- **AS500** - Glass door 5OH - transparent tempered glass 4 mm, with aluminum frame

9 **OPTION WITH EXTRA CHARGE** - metal base - colour: M009 - aluminium semi-matt
10 **Front** - MFC 18 mm, ABS edge, plain hinge 110°
- Standard - vertical handle, aluminium
- Standard (OPTION WITH EXTRA CHARGE) - vertical handle, aluminium - PRO
- Pro (OPTION WITH EXTRA CHARGE) - horizontal handle, aluminium, espagnolette lock - two-point

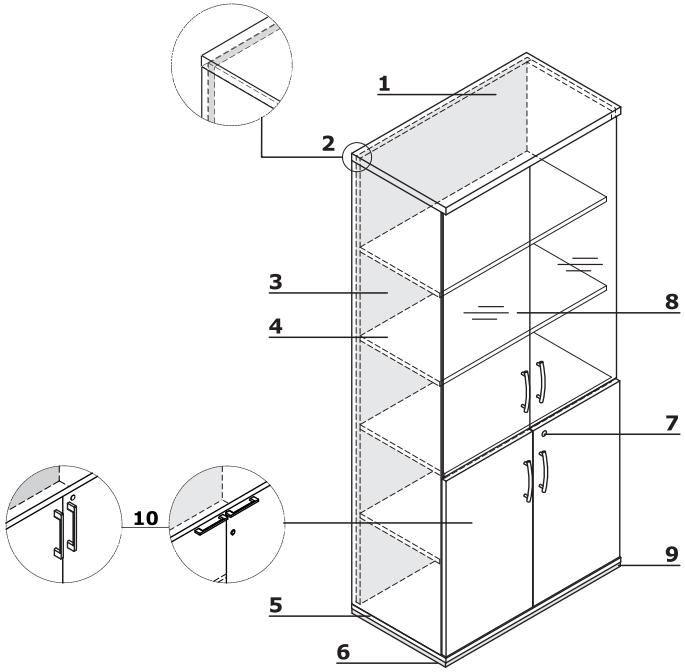

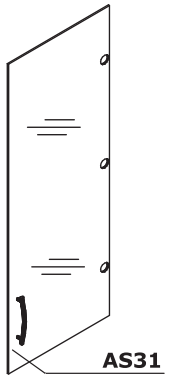

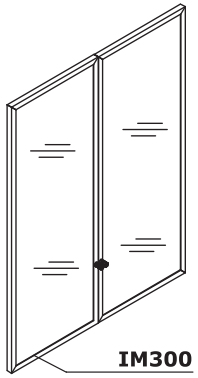

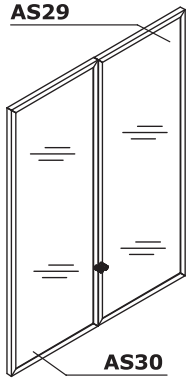

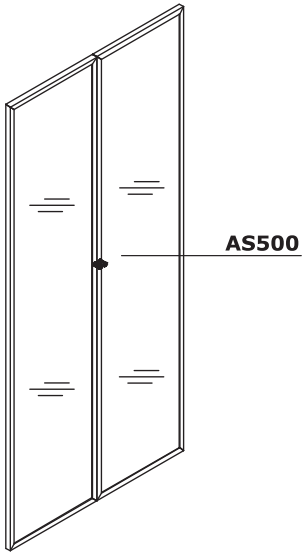

Glass door storages

	Symbol	Price EUR	Dimensions			kg m3 pcs	Comments	Extra charge							
			Width	Depth	Height			II Price group	Metal kick plate	Angle hinge 170°	Front PRO	Glass door AS29 or AS30	Glass door IM30L or IM30P	Glass door AS300	Glass door IM300
	A3902W	**246,-**	402	432	1129	34.25 kg 0.1 m3 4 pcs	3OH	49,-	48,-			52,-	29,-		
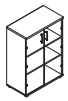	**A3504W**	**398,-**	801	432	1129	57.05 kg 0.172 m3 5 pcs	3OH	49,-	48,-					88,-	64,-
	A3504TMW	**476,-**	801	432	1129	68.15 kg 0.242 m3 7 pcs	3OH, 2 metal shelves	49,-	48,-					88,-	64,-
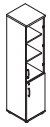	**A58P2W**	**330,-**	402	432	1833	51.2 kg 0.137 m3 4 pcs	5OH; option - left hand side or right hand side front	66,-	48,-	18,-	10,-	52,-	29,-		
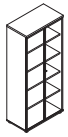	**A5504W**	**720,-**	801	432	1833	86.75 kg 0.233 m3 5 pcs	5OH	66,-	48,-						
	A5504TMW	**855,-**	801	432	1833	84.6 kg 0.236 m3 5 pcs	5OH, 4 metal shelves	66,-	48,-						
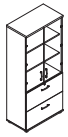	**A54D4W**	**1200,-**	801	432	1833	76.1 kg 0.699 m3 2 pcs	5OH, suspension file drawers without bottom part, MFC shelf	66,-	48,-		10,-			88,-	64,-
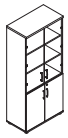	**A5404W**	**540,-**	801	432	1833	77 kg 0.202 m3 4 pcs	5OH	66,-	48,-	18,-	20,-			88,-	64,-

Accessories	Symbol	Price EUR	Dimensions			kg m3 pcs	Comments	Extra charge							
			Width	Depth	Height										
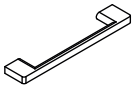	**HPR2**	**44,-**	160	110	20	0.2 kg 0 m3 1 pcs	handles PRO (2 psc);								
	HPR3	**50,-**	160	110	20	0.2 kg 0 m3 1 pcs									
Felt basket															
	KF01	**49,-**	240	340	290	0.6 kg 0.029 m3 1 pcs									

Colour combination - Viga - pedestals

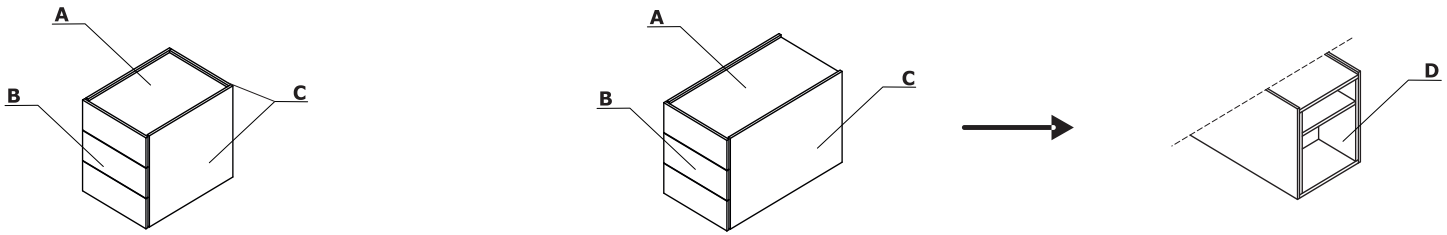

Material	Colour	Pedestal													
		A - Top	B - Front	C - Body outside	D - Body inside										
Veneer	181 - natural oak	✓	✓		✓										
	182 - black oak	✓	✓		✓										
	191 - copper oak	✓	✓		✓										
HPL	183 - FENIX - black matte	✓		✓											

* No possibility to mix oak colours in one product.

Pedestals

1 **Top** - 19 + 14 mm thick, veneer/HPL
2 **Base** - 19 mm thick, veneer
3 **Body outside** - 14 mm thick, HPL - Fenix
4 **Body inside** - 19 mm thick, veneer
5 **Front** - 13 mm thick, veneer
6 **MFC drawer** - ball runners, 100% extractionn; soft closing
7 **Shelf** - 19 mm thick, protection against accidental falling-out, veneer

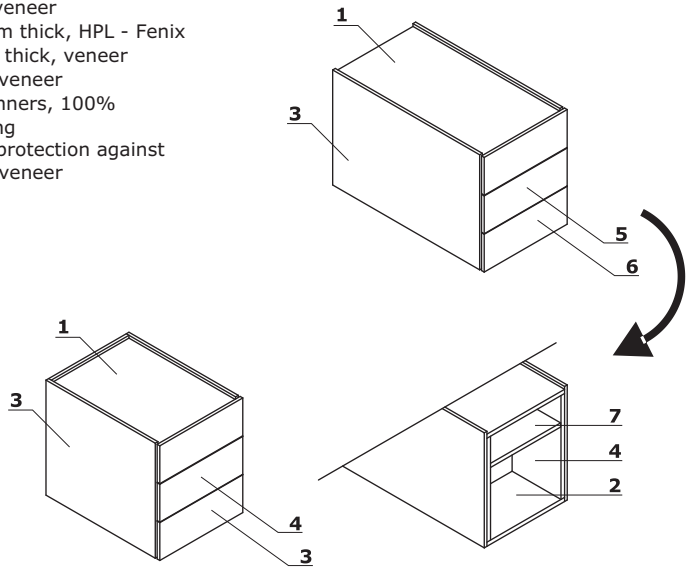

mdd.eu

Pedestals

	Symbol	Price EUR	Dimensions			kg m3 pcs	Comments	Extra charge							
			Width	Depth	Height										
	V12K	**870,-**	438	600	545	35 kg 0.157 m3 1 pcs									
	V13K	**895,-**	438	600	545	35 kg 0.157 m3 1 pcs									
	V14K	**985,-**	438	800	545	45 kg 0.207 m3 1 pcs	access from both sides								

Colour combination - Viga - managerial storages

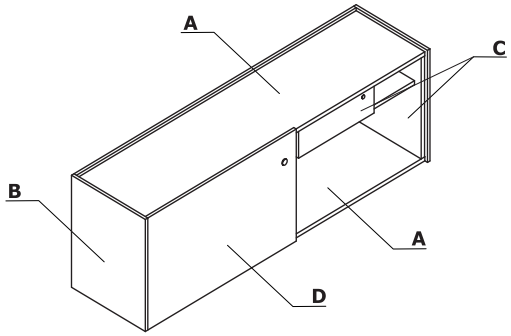

Material	Colour	Managerial storages													
		A - Top, base	B - Sides of the cabinet	C - Body inside	D - Front										
Veneer	181 - natural oak	✓		✓	✓										
	182 - black oak	✓		✓	✓										
	191 - copper oak	✓		✓	✓										
HPL	183 - FENIX - black matte	✓	✓												

* No possibility to mix oak colours in one product.

Managerial storages - V35

1 **Top** - 19 + 14 mm thick, veneer/HPL
2 **Base** - 19 mm thick, veneer
3 **Body outside** - 14 mm thick, HPL - Fenix
4 **Body inside** - 19 mm thick, veneer
5 **Sliding front** - 18 +13 mm thick, soft-closing system, veneer
6 **MFC drawer** - ball runners, 100% extractionn; soft closing
7 **Patent lock**

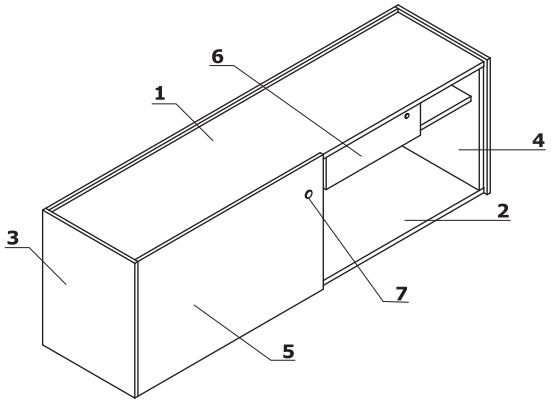

Managerial storages - V36

1 **Top** - 19 + 14 mm thick, veneer/HPL
2 **Base** - 19 mm thick, veneer
3 **Body outside** - 14 mm thick, HPL - Fenix
4 **Body inside** - 19 mm thick, veneer
5 **Sliding front** - 18 +13 mm thick, soft-closing system, veneer
6 **MFC drawer** - ball runners, 100% extractionn; soft closing
7 **Patent lock**

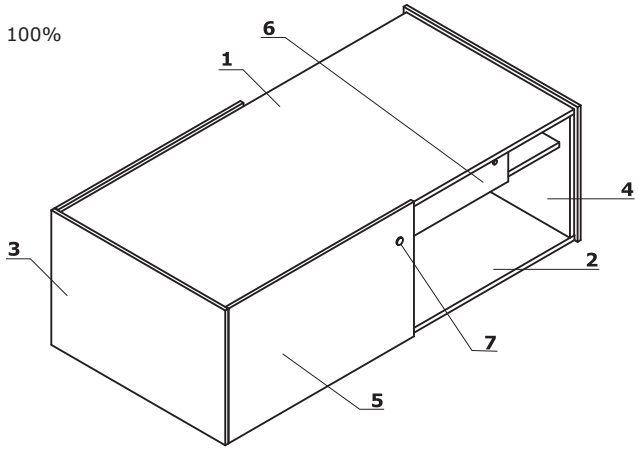

ATTENTION - Cabinet with access from both sides.

Managerial storages

	Symbol	Price EUR	Dimensions			kg m3 pcs	Comments
			Width	Depth	Height		
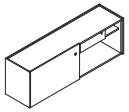	**V35**	**1475,-**	1602	416	545	62.5 kg 0.148 m3 4 pcs	
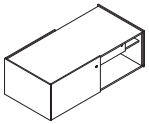	**V36**	**2240,-**	1602	784	545	96.5 kg 0.215 m3 5 pcs	

Extra charge							

Colour combination - Viga - storages

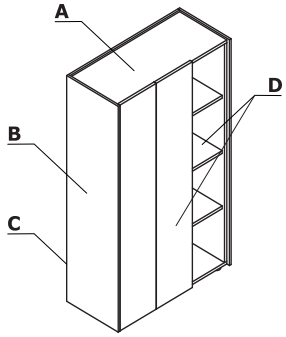

Material	Colour	Storages													
		A - Top	B - Sides of the cabinet	C - Body outside	D - Body inside, front										
Veneer	181 - natural oak			✓	✓										
	182 - black oak			✓	✓										
	191 - copper oak			✓	✓										
HPL	183 - FENIX - black matte	✓	✓												

* No possibility to mix oak colours in one product.

Storages

1 **Top** - 20 mm thick, HPL - Fenix
2 **Base** - 19 mm thick, veneer
3 **Body outside** - 14 mm thick, HPL - Fenix
4 **Front** - Push-to-Open, 19 mm thick, veneer
5 **Shelf** - 19 mm thick, protection against accidental falling-out, veneer

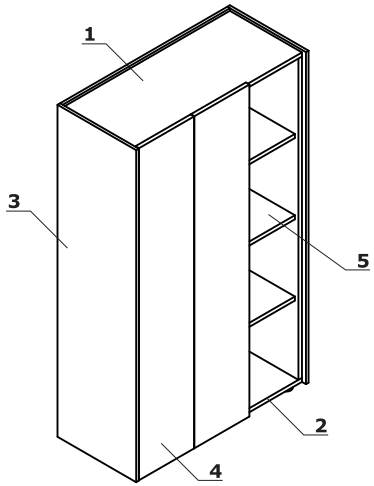

Storages

	Symbol	Price EUR	Dimensions			kg m3 pcs	Comments	Extra charge							
			Width	Depth	Height										
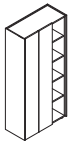	**V22**	**2760,-**	928	424	1944	110.5 kg 0.258 m3 5 pcs									
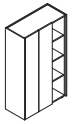	**V23**	**2380,-**	928	424	1565	82 kg 0.219 m3 5 pcs									
	V24	**1030,-**	828	424	807	56 kg 0.128 m3 3 pcs									
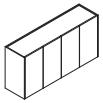	**V25**	**1750,-**	1628	424	807	104 kg 0.224 m3 5 pcs									
	V26	**815,-**	828	424	807	44 kg 0.105 m3 2 pcs	bookcase								
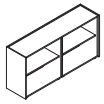	**V27**	**1475,-**	1628	424	807	79 kg 0.186 m3 3 pcs	bookcase								
	V28	**1420,-**	828	424	807	53.95 kg 0.306 m3 1 pcs	drawers								

Colour combination - Stilt - bookcases

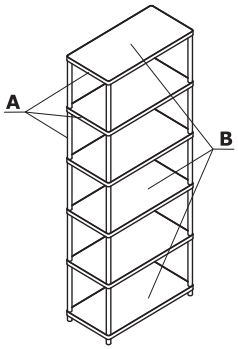

Material	Colour	Stilt - shelving unit														
		A - Top, base, shelf	B - Frame													
MFC	177 - grey matte		M011 - dark grey semi-matt RAL 7042													
	186 - black matte RAL9005		M115 - black semi-matt RAL 9005													
	187 - pearl white matte RAL 1013		M016 - pearl white semi-matt RAL 1013													
	188 - white matte RAL 9010		M015 - white semi-matt RAL 9010													
	189 - olive matte RAL 6013		M026 - olive semi-matte RAL 6013													
	190 - blue matte RAL 5003		M027 - blue semi-matte RAL5003													

Stilt - shelving unit

1 **Top** - 19 mm thick varnished MDF board with metal frame (3x30 mm)
2 **Shelf** - 19 mm thick varnished MDF board with metal frame (3x30 mm); protection against accidental falling-out
3 **Profile** - powder coated steel, Ø30 mm, wall thickness 2 mm
4 **Base** - 19 mm thick varnished MDF board with metal frame (3x30 mm)
5 **Feet** - height 14mm, made from polythene, colour matching the frame

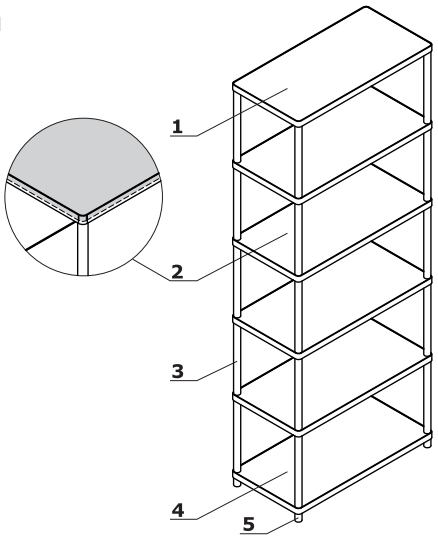

Stilt - shelving unit

	Symbol	Price EUR	Dimensions			kg m3 pcs	Comments	Extra charge							
			Width	Depth	Height										
	SIRS1	**256,-**	400	400	470	11 kg 0.019 m3 2 pcs									
	SIR1	**354,-**	800	400	470	18 kg 0.032 m3 2 pcs									
	SIR2	**515,-**	800	400	867	28.5 kg 0.045 m3 3 pcs									
	SIR3	**675,-**	800	400	1264	38 kg 0.065 m3 5 pcs									
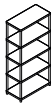	**SIR4**	**850,-**	800	400	1660	48.5 kg 0.079 m3 6 pcs									
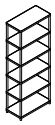	**SIR5**	**1010,-**	800	400	2058	59 kg 0.092 m3 7 pcs									

	Symbol	Price EUR	Dimensions			kg m3 pcs	Comments	Extra charge							
			Width	Depth	Height										
Stilt - shelving unit															
	SIR21	**600,-**	1600	400	470	31.2 kg 0.06 m3 2 pcs									
	SIR22	**895,-**	1600	400	867	50.2 kg 0.092 m3 4 pcs									
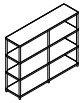	**SIR23**	**1200,-**	1600	400	1264	64.4 kg 0.123 m3 5 pcs									
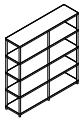	**SIR24**	**1505,-**	1600	400	1660	83.4 kg 0.155 m3 7 pcs									
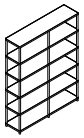	**SIR25**	**1785,-**	1600	400	2058	97.6 kg 0.187 m3 8 pcs									
Felt basket															
	KF01	**49,-**	240	340	290	0.6 kg 0.029 m3 1 pcs									

mdd.eu

Colour combination - Color - pedestals

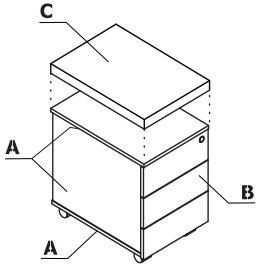

Material	Colour	Mobile pedestal without handles		Pedestal cushion											
		A - Top, base, body	B - Front	C - SKP13											
MFC	08 - black	✓													
	26 - aluminum satinato	✓													
	67 - white pastel	✓													
	154 - anthracite	✓													
HPL	174 - beige matte		✓												
	175 - truffle matte		✓												
	176 - red matte		✓												
	177 - grey matte		✓												
	178 - avocado matte		✓												
	179 - bottle green matte		✓												
	180 - Prussian blue matte		✓												
	184 - sky-blue matte		✓												

Color - pedestals

Material	Colour	Mobile pedestal without handles		Pedestal cushion											
		A - Top, base, body	B - Front	C - SKP13											
Fabric	Nemo			✓											
	Runner			II group ✓											
	Medley			II group ✓											
	**Atlantic			II group ✓											
	Vita			II group ✓											
	Mica			II group ✓											
	Go Check			II group ✓											
	****Charles			II group ✓											
	*Customer's own fabric			II group ✓											
	Synergy			III group ✓											
	***Silvertex			III group ✓											
	Tessa			III group ✓											
	Oceanic			III group ✓											
	Quest			III group ✓											
	Grain			III group ✓											
	Atlas			IV group ✓											

* Employing the customer's fabric requires running upholstery tests in order to check the possibility of realisation.

** There is a possibility of ordering the product in full colour spectrum of Atlantic range, as per Gabriel's pattern book, within 8 weeks

*** There is a possibility of ordering the product in full colour spectrum of Silvertex range, as per Spradling's pattern book, within 15 working days.

**** There is a possibility of ordering the product in full colour spectrum of Charles range, as per Dekoma pattern book, within the standard delivery time.

Mobile pedestal without handles

1 **Top** - MFC 18 mm, coated with HPL high gloss
2 **Body** - MFC 18 mm, ABS edge
3 **Metal drawer** - roll runners, max load 25 kg, 80% extraction, anti-tilt mechanism; OPTION WITH EXTRA CHARGE - ball runners, soft-closing system
4 **Castors** - Ø50 mm, two with brakes
5 **Front** - MFC 18 mm, coated with HPL - mat, ABS edge
6 **Central lock** - foldable key
7 **Pencil tray** - plastic, colour: black
8 **Optional cushion SKP13** - for pedstal, max load 120 kg, ordered separetely
9 **Suspension files drawer** - ball runners, max load 30 kg, 100% extractionn, A4 folders can be situated parallelly and perpendicularly to the front

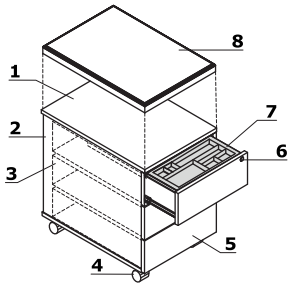

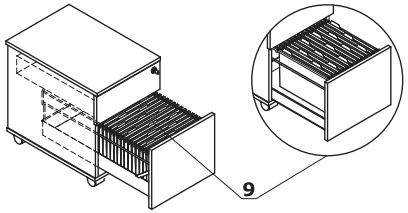

ATTENTION - sitting on the pedestal possible only after mounting the cushion (SKP13); the pedestal with cushion is intended for sitting only - moving the pedestal while sitting may result in damaging the castors

Mobile pedestals without handles with HPL top and front

	Symbol	Price EUR	Dimensions			kg m3 pcs	Comments	Extra charge							
			Width	Depth	Height			II Price group	III Price group	Self closing system	Ball runners	IV price group			
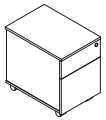	**SLD12HT**	**545,-**	416	600	587	23 kg 0.158 m3 1 pcs	mobile with susspension files drawer, drawers depth – 500 mm, front and top - HPL, all in one colour			34,-	22,-				
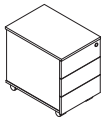	**SLD13HT**	**510,-**	416	600	587	23 kg 0.158 m3 1 pcs	drawers depth - 500 mm, front and top - HPL, all in one colour			34,-	66,-				
Additional elements															
	SKP13	**92,-**	400	600	52	3.7 kg 0.017 m3 1 pcs	pedestal cushions (except KKT110 i KKT130)	14,-	29,-			41,-			

Colour combination - Color - storages

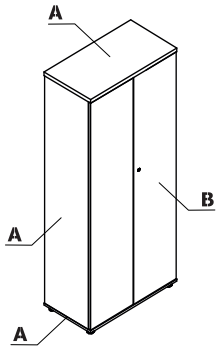

Material	Colour	Storages													
		A - Top, base, body	B - Front												
MFC	08 - black	✓													
	26 - aluminum satinato	✓													
	67 - white pastel	✓													
	154 - anthracite	✓													
HPL	174 - beige matte		✓												
	175 - truffle matte		✓												
	176 - red matte		✓												
	177 - grey matte		✓												
	178 - avocado matte		✓												
	179 - bottle green matte		✓												
	180 - Prussian blue matte		✓												
	184 - sky-blue matte		✓												

Storages with HPL front

1 **Top** - MFC 28 mm, ABS edge
2 **Body** - MFC 18 mm, ABS edge
3 **Leveling feet 27 mm** - range 5 mm
4 **Front** - Push-to-Open, coated with HPL - mat
5 **Shelf** - MFC 18 mm, protection against accidental falling-out, ABS edge
6 **Base** - MFC 18 mm, ABS edge
7 **Patent lock**
8 **Back MFC** - 18 mm, ABS edges
9 **OPTION WITH EXTRA CHARGE** - top A800GT - MFC 28 mm + LACOBEL glass 4 mm, ordered separately
10 **OPTION WITH EXTRA CHARGE** - metal base - colour: M009 - aluminium semi-matt

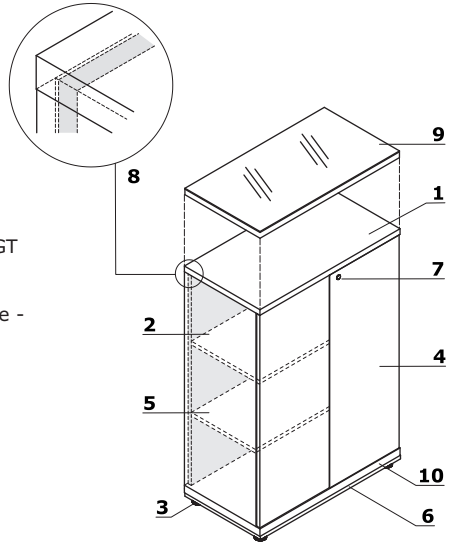

Glass storage

1 **Top** - MFC 28 mm, ABS edge
2 **Body** - MFC 18 mm, ABS edge
3 **Leveling feet 27 mm** - range 5 mm
4 **Front** - Push-to-Open, coated with HPL - mat
5 **Shelf** - MFC 18 mm, protection against accidental falling-out, ABS edge
6 **Base** - MFC 18 mm, ABS edge
7 **Patent lock**
8 **Back MFC** - 18 mm, ABS edges
9 **Glass front** - basic version AS31 - glass door 3OH, transparent tempered glass 4 mm; universal (left, right)
OPTION WITH EXTRA CHARGE:
- **IM300** - glass door 3OH, transparent tempered glass 4 mm, with aluminum frame
- **AS300** - glass door 3OH, frosted tempered glass 4 mm, with aluminum frame

10 **OPTION WITH EXTRA CHARGE** - metal base - colour: M009 - aluminium semi-matt

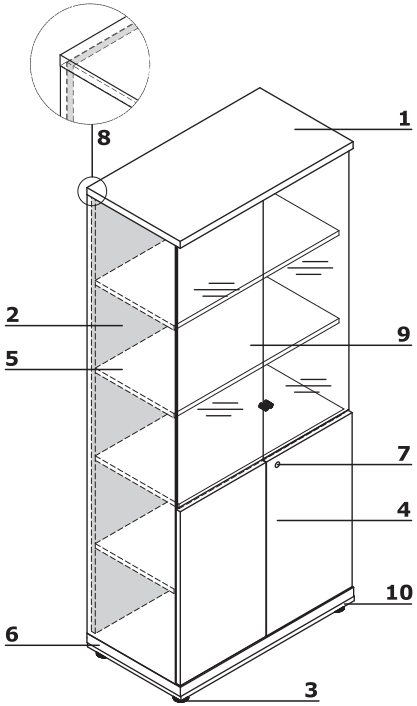

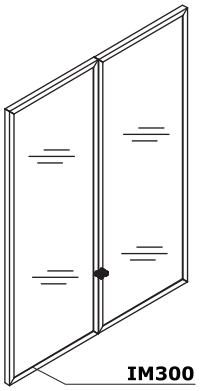

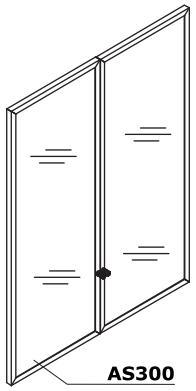

	Symbol	Price EUR	Dimensions			kg m3 pcs	Comments	Extra charge							
			Width	Depth	Height			Metal kick plate	Glass Top A800GT	Glass door AS300	Glass door IM300				
Storages with HPL front															
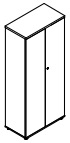	**A2104HZ**	**416,-**	801	432	777	43.9 kg 0.093 m3 3 pcs	front HPL, 2OH	48,-	140,-						
	A3104HZ	**490,-**	801	432	1129	61.1 kg 0.12 m3 3 pcs	front HPL, 3OH	48,-	140,-						
	A5104HZ	**730,-**	801	432	1833	106.2 kg 0.231 m3 5 pcs	front HPL, 5OH	48,-							
	A52P4H	**820,-**	801	432	1833	95.7 kg 0.232 m3 5 pcs	wardrobe anf file storage, 5OH	48,-							
Half bookcases with HPL front															
	A3404HZ	**426,-**	801	432	1129	55.05 kg 0.111 m3 3 pcs	front HPL, 3OH	48,-	140,-						
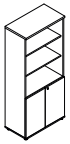	**A5404HZ**	**530,-**	801	432	1833	92.55 kg 0.205 m3 5 pcs	front HPL, 5OH	48,-							
Glass storage															
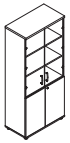	**A5404HZW**	**730,-**	801	432	1833	93.55 kg 0.258 m3 7 pcs				88,-	64,-				
Additional elements															
	ZT1000	**42,-**	15	15	0	0.5 kg 0.001 m3 1 pcs	plugs for holes ø 15mm 1000pcs								

Colour combination - Hangers

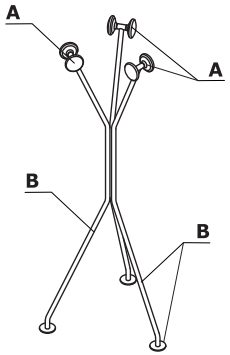

Material	Colour	Hangers Ramo														
		A - Knob	B - Frame													
Metal	M010 - light grey semi-matt RAL 7044	Light grey RAL7044	✓													
	M012 - dark green semi-matt RAL 6012	Dark green RAL6012	✓													
	M013 - burgundy semi-matt RAL 3007	Burgundy RAL 3007	✓													
	M028 - brick red semi-matte RAL 0404040	Brick red RAL 0404040	✓													
	M030 - beige semi-matte RAL 0608005	Beige RAL 0608005	✓													
	M154 - anthracite semi-matt RAL 7043	Anthracite RAL 7043	✓													

Technical specification

1 Knob - wood
2 Frame - powder coated metal

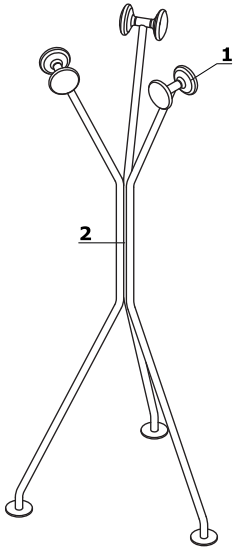

Hangers Ramo

	Symbol	Price EUR	Dimensions			kg m3 pcs	Comments
			Width	Depth	Height		
	RM01	**350,-**	576	653	1632	11 kg 0.48 m3 3 pcs	

Extra charge							

MFC

08 - black	26 - aluminum satinato	31 - canadian oak	39 - polar birch	64 - cocoa	67 - white pastel	106 - lowland walnut	154 - anthracite
167 - grey oak	168 - natural oak	169 - honey oak	170 - acacia	171 - dark walnut	177 - grey matte	186 - black matte RAL9005	187 - pearl white matte RAL 1013
188 - white matte RAL 9010	189 - olive matte RAL 6013	190 - blue matte RAL 5003					

HPL

08 - black	26 - aluminum satinato	31 - canadian oak	39 - polar birch	64 - cocoa	67 - white pastel	106 - lowland walnut	154 - anthracite
167 - grey oak	168 - natural oak	169 - honey oak	170 - acacia	171 - dark walnut	148 - grey high gloss	101 - black high gloss	155 - anthracite high gloss
73 - white high gloss	174 - beige matte	175 - truffle matte	176 - red matte	177 - grey matte	178 - avocado matte	179 - bottle green matte	180 - Prussian blue matte
184 - sky-blue matte							

Metal

M011 - dark grey semi-matt RAL 7042	M015 - white semi-matt RAL 9010	M016 - pearl white semi-matt RAL 1013	M026 - olive semi-matte RAL 6013	M027 - blue semi-matte RAL5003	M115 - black semi-matt RAL 9005

Fabric Nemo - first price group

NE-1 - beige	NE-2 - yellow	NE-3 - orange	NE-5 - red	NE-9 - green	NE-10 - grey	NE-14 - graphite	NE-15 - navy blue
NE-16 - black	NE-17 - blue						

Fabric Runner - second price group

R-61128 - beige	R-63034 - orange	R-64089 - red	R-66064 - navy blue	R-66063 - blue	R-68056 - green	R-68110 - Dark green	R-60025 - graphite
R-60011 - grey	R-60999 - black						

Fabric Medley - second price group

M-61189 - beige	M-62054 - mustard	M-62002 - yellow	M-63017 - rust-brown	M-64019 - red	M-63064 - pink	M-65011 - grey-violet	M-66010 - blue
M-67006 - light blue	M-68005 - dark olive	M-66008 - grey	M-60003 - light grey	M-60999 - black			

Fabric Atlantic - second price group (Remaining Atlantic colours, as per Gabriel’s pattern book, available within 8 weeks)

A-61078 - beige	A-64089 - red	A-65037 - violet	A-66064 - navy blue	A-67043 - dark turquoise	A-67030 - aquamarine	A-62048 - olive	A-60011 - grey
A-60141 - light grey	A-60025 - graphite						

Fabric Vita - second price group

V-01 - light grey	V-02 - beige	V-03 - yellow	V-04 - grey	V-07 - dark grey	V-09 - olive	V-10 - grey-brown	V-11 - rust-brown
V-12 - black	V-39 - chocolate	V-18 - aquamarine	V-19 - blue	V-29 - dark green	V-44 - beige	V-46 - brown	

Fabric Charles - second price group (There is a possibility of ordering the product in full colour spectrum of Charles range, as per Dekoma pattern book, within the standard delivery time.)

C-01 - black	C-05 - grey	C-06 - beige	C-14 - brown	C-18 - rust-brown	C-21 - red	C-30 - pink	C-31 - marsala
C-32 - dark blue	C-35 - blue	C-41 - yellow	C-44 - olive	C-45 - green			

Fabric Go check - second price group

G-66136 - blue	G-66135 - light blue	G-60080 - dark grey	G-66138 - navy blue	G-60084 - dark graphite	G-68149 - dark green	G-68152 - green	G-60079 - grey
G-64183 - marsala	G-63079 - orange	G-64171 - red	G-64172 - burgundy	G-61144 - brown	G-61145 - dark brown		

Fabric Mica - second price group

MC-01 - pink	MC-02 - red	MC-03 - dark red	MC-04 - navy blue	MC-05 - blue	MC-06 - aquamarine	MC-07 - bottle green	MC-08 - green
MC-09 - olive	MC-10 - light olive	MC-11 - mustard	MC-12 - yellow	MC-13 - beige	MC-14 - light grey	MC-15 - grey	MC-16 - graphite
MC-17 - light blue	MC-18 - mint	MC-19 - burgundy					

Fabric Synergy - third price group

LDS08 - grey melange	LDS19 - beige	LDS20 - light grey	LDS27 - black	LDS29 - dark grey	LDS44 - yellow	LDS50 - dark green	LDS57 - turquoise
LDS60 - bottle green	LDS61 - plum	LDS69 - navy blue	LDS79 - brown	LDS84 - orange	LDS86 - red	LDS88 - aubergine	

Fabric Silvertex - third price group - There is a possibility of ordering the product in full colour spectrum of Silvertex range, as per Spradling's pattern book, within 15 working days.

Fabric Tessa - third price group

T-08 - cream white	T-09 - beige	T-05 - grey	T-03 - dark grey	T-02 - graphite

Fabric Oceanic - third price group

O-16 - pink	O-05 - coral	O-12 - red	O-07 - yellow	O-04 - light green	O-15 - light blue	O-11 - blue	O-13 - light grey
O-08 - dark grey	O-01 - black						

Fabric Quest - third price group

Q-26 - pink	Q-25 - orange	Q-24 - red	Q-21 - pastel yellow	Q-19 - beige	Q-18 - olive	Q-13 - light green	Q-07 - light blue
Q-08 - navy blue	Q-04 - graphite						

Fabric Grain - third price group

GR-64249 - pink	GR-62122 - yellow	GR-62016 - light orange	GR-63117 - orange	GR-68243 - olive	GR-66236 - sky-blue	GR-66232 - navy blue	GR-60301 - grey
GR-61252 - beige	GR-61250 - white						

Fabric Atlas - fourth price group

AS-111 - light grey	AS-161 - dark grey	AS-391 - brown	AS-501 - pink	AS-531 - orange	AS-651 - red	AS-681 - burgundy	AS-781 - navy blue
AS-971 - light green	AS-981 - dark green						

Veneer

181 - natural oak	182 - black oak	191 - copper oak

Technical data

Price group	Fabric	Material	Weight	Abrasion resistance rubs	Pilling resistance	Colour fastness to light	Colour fastness to rubbing	Flammability	More information
I	**NEMO**	Polyester 100%	366g/m2	PN-EN ISO 12947 - 2:2 100,000	Scale 1-8, max 8, PN-EN ISO 105 B02:2013 3-4	Scale 1-5, max 5, PN-EN 1021 - 2:2007, PN-EN 1021 - 1:2007	Scale 1-5, max 5, EN ISO 105x12, (wet/dry) 4-5		
II	**RUNNER**	Polyester 100%	320g/m2, 510g/lm	70,000 Martindale, BS EN 14465, EN ISO 12947-2	Scale 1-5, max 5, EN ISO 12945-2 4-5	Scale 1-8, max 8, EN ISO 105-B02 5-7	Scale 1-5, max 5, EN ISO 105x12, (wet/dry) 4-5	BS EN 1021-2 Match, BS EN 1021-1 Cigarette, California Bulletin CAL 117-E-Class 1, CA TB 117-2013, Class Uno UNI 9175 Class 1	Acoustic test sound absorption ISO 354
II	**MEDLEY**	Polyester 100%	364g/m2, 510g/lm	75,000 Martindale	Scale 1-5, max 5, EN ISO 12945-2 4	Scale 1-8, max 8, EN ISO 105-B02 5-7	Scale 1-5, max 5, EN ISO 105x12, (wet/dry) 4-5/4-5	BS EN 1021-2 Match, BS EN 1021-1 Cigarette, California Bulletin CAL 117-E-Class 1, CA TB 117-2013, Class Uno UNI 9175 Class 1	Acoustic test sound absorption: ISO 354
II	**ATLANTIC**	Polyester 100%	353g/m2, 530g/lm	110,000 Martindale, EN ISO 12947-2)		Scale 1-8, max 8, EN ISO 105-B02 5-7	Scale 1-5, max 5, EN ISO 105x12, (wet/dry) 4-5/4-5	BS EN 1021-2 Match, BS EN 1021-1 Cigarette, ASTM E 84, BS 476 Part 7, Class Uno UNI 9175 Class 1, NF P 92-503 M3P, CA TB 117-2013	
II	**VITA**	Surface: PVC, 98.5%, PU 1.5% Substrate: Polyester 50%, 50% Cotton	850g/m2, 1190g/lm	100,000 Martindale, EN ISO 5470-2:2003,		Scale 1-8, max 8, EN ISO 105-B02 5-7	Scale 1-5, max 5, EN ISO 105x12, (wet/dry) 4-5/4-5	BS EN 1021-2 Match, BS EN 1021-1 Cigarette, BS 5852:2006 Section 4, Ignition Source 5, BS 7176:2017 Medium Hazard NF P 95 503 M2, FMVSS 302 (ISO 3795)	Flexing cycles: BS EN ISO 7854:1997 Method B, 400.000, Anti-microbial/ Anti-fungal: AATCC 147:2011
II	**CHARLES**	Polyester 100%	433g/m2	90,000 Martindale, EN ISO 12947-2	Scale 1-5, max 5, EN ISO 12945-2 5	EN ISO 105-B02 5	Scale 1-5, max 5, EN ISO 105-X12, (wet/dry) 4-5	EN1021-2	Thread offset in the seam: EN ISO 13 936-2
II	**GO CHECK**	Trevira cs 100%	310g/m2	80,000 Martindale, EN ISO 12947-1,2 60,000 Double rubs wyzenbeek (ASTM D4157-07)	Scale 1-5, max 5, EN ISO 12945-2 5	Scale 1-8, max 8, EN ISO 105-B02 5-8	Scale 1-5, max 5, EN ISO 105-X12:2001, (wet/dry) 4-5/4-5	BS EN 1021-1&2 Cigarette and Match, BS 5852:2006 Crib 5, BS 7176:2017 Medium Hazard, NFP 92-503/504/505 M1, Class Uno UNI 9175 Class 1	
II	**MICA**	97% post-consumer recycled polyester / 3% polyester	218g/m2	60,000 Martindale, EN ISO 12947-2 100,000 Double rubs wyzenbeek (ASTM D4157-07)	Scale 1-5, max 5, EN ISO 12945-2 4-5	Scale 1-8, max 8, EN ISO 105-B02 5-8	Scale 1-5, max 5, EN ISO 105-X12:2001, (wet/dry) 4-5/4-5	BS EN 1021-1 Cigarette, BS EN 1021-2 Match, CA TB 117-2013, ASTM E 84 Class I, BS 476 Part 7 Class I	Acoustic test air flow resistanc EN 29053 & ISO 9053-1 (airflow resistance)

Technical data

Price group	Fabric	Material	Weight	Abrasion resistance rubs	Pilling resistance	Colour fastness to light	Colour fastness to rubbing	Flammability	More information
III	**SYNERGY**	Virgin Wool 95%, Polyamide 5%	400g/m2 560g/lm	100,000 Martindale		ISO 105 B02: 5	Scale 1-5, max 5, EN ISO 105-X12:2001, (wet/dry) 4/4	BS EN 1021-1&2 Cigarette and Match, BS 7176 Low Hazard. UNI 9175 Classe 1 IM, B 3825 & A 3800-1	
III	**TESSA**	Poliester 95%, Akryl 5%	500g/m2	>75,000 Martindale ISO 12 497-2	Scale 1-5, max 5, EN ISO 12945-2 4-5	ISO 105 B02: 4	Scale 1-5, max 5, EN ISO 105-X12:2001, (wet/dry) 4-5/4-5		Thread offset in the seam: EN ISO 13 936-2
III	**OCEANIC**	100% post-consumer recycled polyester including 50% Seaqual Yarn	497g/m2	≥100,000 Martindale		5 (ISO 105 - B02), OOC16: 4/5 (ISO 105 - B02)	Scale 1-5, max 5, EN ISO 105-X12:2001, (wet/dry) 4-5/4-5	BS EN 1021-1&2 Cigarette and Match,BS 7176 Low Hazard. BS 5852 Ignition Source 5 with EnviroFlam5, BS 7176 Medium Hazard with EnviroFlam5	
III	**QUEST**	100% post-consumer recycled polyester including 75% Seaqual Yarn	330g/m2	≥100,000 Martindale		4-6 (ISO 105 - B02)	Scale 1-5, max 5, EN ISO 105-X12:2001, (wet/dry) 4/4	BS EN 1021-1&2 Cigarette and Match,BS 7176 Low Hazard. BS 5852 Ignition Source 5 with EnviroFlam5, BS 7176 Medium Hazard with EnviroFlam5, B 3825 & A 3800-1	
III	**GRAIN**	2287: 92% post-consumer recycled polyester / 8% polyester 2288: 80% post-consumer recycled polyester / 20% polyeste	439g/m2	100,000 Martindale (EN ISO 12947-2), double rubs wyzenbeek (ASTM D4157-07) (heavy duty upholstery) 100,000	Scale 1-5, max 5, EN ISO 12945-2 5	scale 1-8, max. 8 5-7 (ISO 105 - B02)	Scale 1-5, max 5, EN ISO 105-X12:2001, (wet/dry) 4-5/4-5	BS EN 1021-1&2 Cigarette and Match, CA TB 117-2013	
IV	**ATLAS**	New wool 90% Nylon 10%	286g/m2 400g/lm	100,000 Martindale EN ISO 12947	EN ISO 12945-2 4-5	ISO 105 B02: 6-7	ISO 105-X12:2001, (wet/dry) 4-5/4-5	BS EN 1021-2 Match, BS EN 1021-1 Cigarette, BS 5 5852 Crib 5, BS 5852 ignition source 3, BS 5852 Part 1, NF D 60 013, UNI 9175 1IM, US Cal. Bull. 117-2013, MED. CertificateIMO	
IV	**LEATHER**	Leather type - corrected grain leather Type of finishing - pigmented leather		Dry: 500 cycles - min. 4 grey scale Wet: 250 cycles - min. 4 grey scale UNI EN ISO 11640		Light fastness: min. 4 grey scale UNI ISO 105-802		Match flame test: No ignition UNI EN 1021-1-2006 BS EN 1021-1-2006	